Operating instructions

GB

Welding machine

Taurus 335 Basic S KGE

099-005214-EW501

19.05.2011

General instructions

CAUTION

Read the operating instructions!
The operating instructions provide an introduction to the safe use of the products.

- Read the operating instructions for all system components!
- Observe accident prevention regulations!
- Observe all local regulations!
- Confirm with a signature where appropriate.

NOTE

In the event of queries on installation, commissioning, operation or special conditions at the installation site, or on usage, please contact your sales partner or our customer service department on +49 2680 181-0.
A list of authorised sales partners can be found at www.ewm-group.com.

Liability relating to the operation of this equipment is restricted solely to the function of the equipment. No other form of liability, regardless of type, shall be accepted. This exclusion of liability shall be deemed accepted by the user on commissioning the equipment.

The manufacturer is unable to monitor whether or not these instructions or the conditions and methods are observed during installation, operation, usage and maintenance of the equipment.
An incorrectly performed installation can result in material damage and injure persons as a result. For this reason, we do not accept any responsibility or liability for losses, damages or costs arising from incorrect installation, improper operation or incorrect usage and maintenance or any actions connected to this in any way.

1 Contents

2 Safety instructions

2.1 Notes on the use of these operating instructions

DANGER

Working or operating procedures which must be closely observed to prevent imminent serious and even fatal injuries.

- Safety notes include the "DANGER" keyword in the heading with a general warning symbol.
- The hazard is also highlighted using a symbol on the edge of the page.

WARNING

Working or operating procedures which must be closely observed to prevent serious and even fatal injuries.

- Safety notes include the "WARNING" keyword in the heading with a general warning symbol.
- The hazard is also highlighted using a symbol in the page margin.

CAUTION

Working or operating procedures which must be closely observed to prevent possible minor personal injury.

- The safety information includes the "CAUTION" keyword in its heading with a general warning symbol.
- The risk is explained using a symbol on the edge of the page.

CAUTION

Working and operating procedures which must be followed precisely to avoid damaging or destroying the product.

- The safety information includes the "CAUTION" keyword in its heading without a general warning symbol.
- The hazard is explained using a symbol at the edge of the page.

NOTE

Special technical points which users must observe.

- Notes include the "NOTE" keyword in the heading without a general warning symbol.

Instructions and lists detailing step-by-step actions for given situations can be recognised via bullet points, e.g.:

- Insert the welding current lead socket into the relevant socket and lock.

2.2 Explanation of icons

Symbol	Description
	**Press**
	**Do not press**
	**Turn**
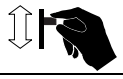	**Switch**
	**Switch off machine**
	**Switch on machine**
	**ENTER (enter the menu)**
	**NAVIGATION (Navigating in the menu)**
	**EXIT (Exit the menu)**
	**Time display (example: wait 4s/press)**
	**Interruption in the menu display (other setting options possible)**
	**Tool not required/do not use**
	**Tool required/use**

2.3 General

DANGER

Electromagnetic fields!
The power source may cause electrical or electromagnetic fields to be produced which could affect the correct functioning of electronic equipment such as IT or CNC devices, telecommunication lines, power cables, signal lines and pacemakers.

- Observe the maintenance instructions! (see Maintenance and Testing chapter)
- Unwind welding leads completely!
- Shield devices or equipment sensitive to radiation accordingly!
- The correct functioning of pacemakers may be affected (obtain advice from a doctor if necessary).

Do not carry out any unauthorised repairs or modifications!
To avoid injury and equipment damage, the unit must only be repaired or modified by specialist, skilled persons!
The warranty becomes null and void in the event of unauthorised interference.

- Appoint only skilled persons for repair work (trained service personnel)!

Electric shock!
Welding machines use high voltages which can result in potentially fatal electric shocks and burns on contact. Even low voltages can cause you to get a shock and lead to accidents.

- Do not touch any live parts in or on the machine!
- Connection cables and leads must be free of faults!
- Switching off alone is not sufficient!
- Place welding torch and stick electrode holder on an insulated surface!
- The unit should only be opened by specialist staff after the mains plug has been unplugged!
- Only wear dry protective clothing!
- Wait for 4 minutes until the capacitors have discharged!

WARNING

Risk of injury due to radiation or heat!
Arc radiation results in injury to skin and eyes.
Contact with hot workpieces and sparks results in burns.

- Use welding shield or welding helmet with the appropriate safety level (depending on the application)!
- Wear dry protective clothing (e.g. welding shield, gloves, etc.) according to the relevant regulations in the country in question!
- Protect persons not involved in the work against arc beams and the risk of glare using safety curtains!

Explosion risk!
Apparently harmless substances in closed containers may generate excessive pressure when heated.

- Move containers with inflammable or explosive liquids away from the working area!
- Never heat explosive liquids, dusts or gases by welding or cutting!

WARNING

Smoke and gases!
Smoke and gases can lead to breathing difficulties and poisoning. In addition, solvent vapour (chlorinated hydrocarbon) may be converted into poisonous phosgene due to the ultraviolet radiation of the arc!
- Ensure that there is sufficient fresh air!
- Keep solvent vapour away from the arc beam field!
- Wear suitable breathing apparatus if appropriate!

Fire hazard!
Flames may arise as a result of the high temperatures, stray sparks, glowing-hot parts and hot slag produced during the welding process.
Stray welding currents can also result in flames forming!
- Check for fire hazards in the working area!
- Do not carry any easily flammable objects such as matches or lighters.
- Keep appropriate fire extinguishing equipment to hand in the working area!
- Thoroughly remove any residue of flammable substances from the workpiece before starting welding.
- Only continue work on welded workpieces once they have cooled down.
  Do not allow to come into contact with flammable material!
- Connect welding leads correctly!

Risk of accidents if these safety instructions are not observed!
Non-observance of these safety instructions is potentially fatal!
- Carefully read the safety information in this manual!
- Observe the accident prevention regulations in your country.
- Inform persons in the working area that they must observe the regulations!

CAUTION

Noise exposure!
Noise exceeding 70 dBA can cause permanent hearing damage!
- Wear suitable ear protection!
- Persons located within the working area must wear suitable ear protection!

CAUTION

Obligations of the operator!
The respective national directives and laws must be observed for operation of the machine!
- National implementation of the framework directive (89/391/EWG), as well as the associated individual directives.
- In particular, directive (89/655/EWG), on the minimum regulations for safety and health protection when staff members use equipment during work.
- The regulations regarding work safety and accident prevention for the respective country.
- Setting up and operating the machine according to IEC 60974-9.
- Check at regular intervals that users are working in a safety-conscious way.
- Regular checks of the machine according to IEC 60974-4.

CAUTION

Damage due to the use of non-genuine parts!
The manufacturer's warranty becomes void if non-genuine parts are used!

- Only use system components and options (power sources, welding torches, electrode holders, remote controls, spare parts and replacement parts, etc.) from our range of products!
- Only insert and lock accessory components into the relevant connection socket when the machine is switched off.

Damage to the machine due to stray welding currents!
Stray welding currents can destroy protective earth conductors, damage equipment and electronic devices and cause overheating of components leading to fire.

- Make sure all welding leads are securely connected and check regularly.
- Always ensure a proper and secure electrical connection to the workpiece!
- Set up, attach or suspend all conductive power source components like casing, transport vehicle and crane frames so they are insulated!
- Do not place any other electronic devices such as drillers or angle grinders, etc., on the power source, transport vehicle or crane frames unless they are insulated!
- Always put welding torches and electrode holders on an insulated surface when they are not in use!

Mains connection
Requirements for connection to the public mains network
High-performance machines can influence the mains quality by taking current from the mains network. For some types of machines, connection restrictions or requirements relating to the maximum possible line impedance or the necessary minimum supply capacity at the interface with the public network (Point of Common Coupling, PCC) can therefore apply. In this respect, attention is also drawn to the machines' technical data. In this case, it is the responsibility of the operator, where necessary in consultation with the mains network operator, to ensure that the machine can be connected.

CAUTION

EMC Machine Classification

In accordance with IEC 60974-10, welding machines are grouped in two electromagnetic compatibility classes (see technical data):

Class A machines are not intended for use in residential areas where the power supply comes from the low-voltage public mains network. When ensuring the electromagnetic compatibility of class A machines, difficulties can arise in these areas due to interference not only in the supply lines but also in the form of radiated interference.

Class B machines fulfil the EMC requirements in industrial as well as residential areas, including residential areas connected to the low-voltage public mains network.

Setting up and operating

When operating arc welding systems, in some cases, electro-magnetic interference can occur although all of the welding machines comply with the emission limits specified in the standard. The user is responsible for any interference caused by welding.

In order to **evaluate** any possible problems with electromagnetic compatibility in the surrounding area, the user must consider the following: (see also EN 60974-10 Appendix A)

- Mains, control, signal and telecommunication lines
- Radios and televisions
- Computers and other control systems
- Safety equipment
- The health of neighbouring persons, especially if they have a pacemaker or wear a hearing aid
- Calibration and measuring equipment
- The immunity to interference of other equipment in the surrounding area
- The time of day at which the welding work must be carried out

Recommendations for **reducing interference emission**

- Mains connection, e.g. additional mains filter or shielding with a metal tube
- Maintenance of the arc welding equipment
- Welding lines should be as short as possible and run closely together along the ground
- Potential equalization
- Earthing of the workpiece. In cases where it is not possible to earth the workpiece directly, it should be connected by means of suitable capacitors.
- Shielding from other equipment in the surrounding area or the entire welding system

2.4 Transport and installation

WARNING

Incorrect handling of shielding gas cylinders!
Incorrect handling of shielding gas cylinders can result in serious and even fatal injury.

- Observe the instructions from the gas manufacturer and in any relevant regulations concerning the use of compressed air!
- Place shielding gas cylinders in the holders provided for them and secure with fixing devices.
- Avoid heating the shielding gas cylinder!

Risk of accident due to improper transport of machines that may not be lifted!
Do not lift or suspend the machine! The machine can fall down and cause injuries! The handles and brackets are suitable for transport by hand only!

- The machine may not be lifted by crane or suspended!

CAUTION

Risk of tipping!
There is a risk of the machine tipping over and injuring persons or being damaged itself during movement and set up. Tilt resistance is guaranteed up to an angle of 10° (according to EN 60974-A2).

- Set up and transport the machine on level, solid ground!
- Secure add-on parts using suitable equipment!
- Replace damaged transport rollers and their fixing elements!
- Fix external wire feed units during transport (avoid uncontrolled rotation)!

Damage due to supply lines not being disconnected!
During transport, supply lines which have not been disconnected (mains supply leads, control leads, etc.) may cause hazards such as connected equipment tipping over and injuring persons!

- Disconnect supply lines!

CAUTION

Equipment damage when not operated in an upright position!
The units are designed for operation in an upright position!
Operation in non-permissible positions can cause equipment damage.

- Only transport and operate in an upright position!

2.5 Ambient conditions

CAUTION

Installation site!
The machine must not be operated in the open air and must only be set up and operated on a suitable, stable and level base!

- The operator must ensure that the ground is non-slip and level, and provide sufficient lighting for the place of work.
- Safe operation of the machine must be guaranteed at all times.

CAUTION

Equipment damage due to dirt accumulation!
Unusually high quantities of dust, acid, corrosive gases or substances may damage the equipment.

- Avoid high volumes of smoke, vapour, oil vapour and grinding dust!
- Avoid ambient air containing salt (sea air)!

Non-permissible ambient conditions!
Insufficient ventilation results in a reduction in performance and equipment damage.

- Observe the ambient conditions!
- Keep the cooling air inlet and outlet clear!
- Observe the minimum distance of 0.5 m from obstacles!

2.5.1 In operation

Temperature range of the ambient air:

- -20 °C to +40 °C

Relative air humidity:

- Up to 50% at 40 °C
- Up to 90% at 20 °C

2.5.2 Transport and storage

Storage in an enclosed space, temperature range of the ambient air:

- -25 °C to +55 °C

Relative air humidity

- Up to 90% at 20 °C

3 Intended use

This machine has been manufactured according to the latest developments in technology and current regulations and standards. It must only be operated in line with the instructions on correct usage.

WARNING

Hazards due to improper usage!
Hazards may arise for persons, animals and material objects if the equipment is not used correctly. No liability is accepted for any damages arising from improper usage!

- The equipment must only be used in line with proper usage and by trained or expert staff!
- Do not modify or convert the equipment improperly!

3.1 Applications

3.1.1 MIG/MAG standard welding

Metal arc welding using a wire electrode whereby gas from an external source surrounds the arc and the molten pool to protect them from the atmosphere.

3.1.2 MIG/MAG cored wire welding

Welding with cored wire electrodes consisting of a metal casing and a powder core.

As with MIG/MAG standard welding, the arc is protected from the atmosphere by shielding gas. The gas is supplied either externally (gas shielded cored wires) or produced in the arc by means of the powder core (self-shielding cored wires).

3.1.3 MMA welding

Manual arc welding or, for short, MMA welding. It is characterised by the fact that the arc burns between a melting electrode and the molten pool. There is no external protection; any protection against the atmosphere comes from the electrode.

3.2 Documents which also apply

3.2.1 Warranty

NOTE

For further information, please see the accompanying supplementary sheets "Machine and Company Data, Maintenance and Testing, Warranty"!

3.2.2 Declaration of Conformity

The designated machine conforms to EC Directives and standards in terms of its design and construction:

- EC Low Voltage Directive (2006/95/EC),
- EC EMC Directive (2004/108/EC),

This declaration shall become null and void in the event of unauthorised modifications, improperly conducted repairs, non-observance of the deadlines for the repetition test and / or non-permitted conversion work not specifically authorised by the manufacturer.
The original copy of the declaration of conformity is enclosed with the unit.

3.2.3 Welding in environments with increased electrical hazards

In compliance with IEC / DIN EN 60974, VDE 0544 the machines can be used in environments with an increased electrical hazard.

3.2.4 Service documents (spare parts and circuit diagrams)

DANGER

Do not carry out any unauthorised repairs or modifications!
To avoid injury and equipment damage, the unit must only be repaired or modified by specialist, skilled persons!
The warranty becomes null and void in the event of unauthorised interference.

- Appoint only skilled persons for repair work (trained service personnel)!

Original copies of the circuit diagrams are enclosed with the unit.
Spare parts can be obtained from the relevant authorised dealer.

4 Machine description – quick overview

4.1 Taurus 335 Basic S

4.1.1 Front view

NOTE

The maximum possible machine configuration is given in the text description. If necessary, the optional connection may need to be retrofitted (see "Accessories" chapter).

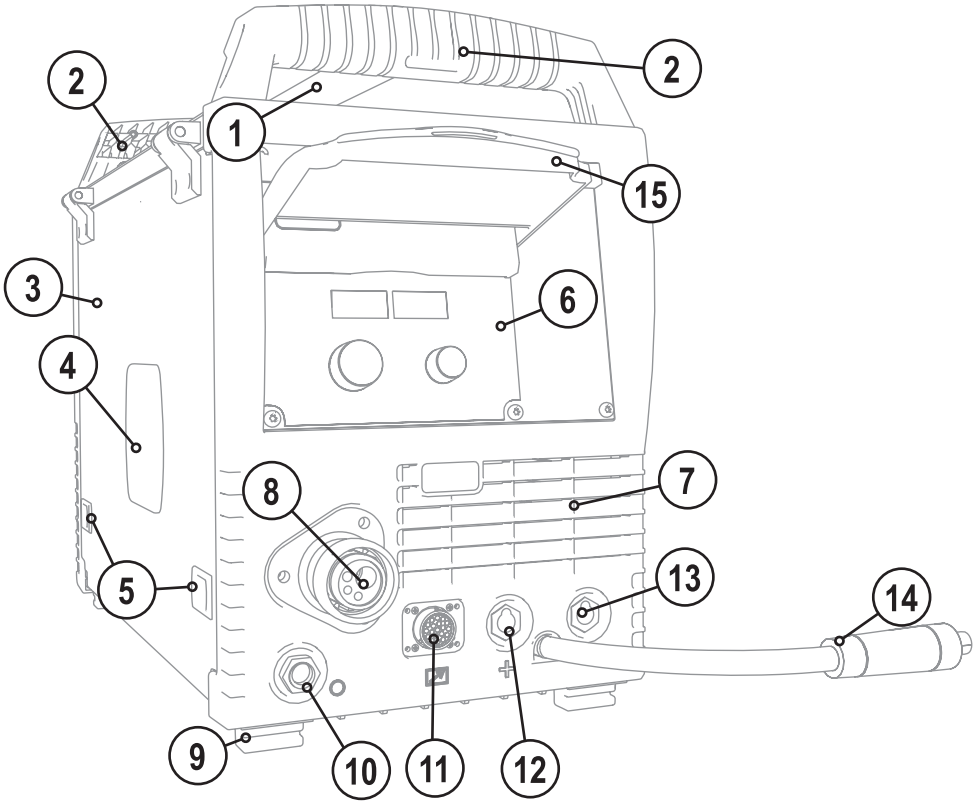

Figure 4-1

Item	Symbol	Description
1		**Transport bar**
2		**Carrying handle**
3		**Cover for wire delivery unit and operating elements**
4		**Wire spool inspection window** Check wire supply
5		**Slide latch, lock for the protective cap**
6		**Machine control** See Machine control – operating elements chapter
7		**Cooling air inlet**
8		**Central connection for welding torch (Euro)** Integrated welding current, shielding gas and torch trigger
9		**Machine feet**
10		**Park socket, polarity selection plug** Retainer for the polarity selection plug in MMA mode or for transport.
11		**19-pole connection socket (analogue)** For connecting analogue accessory components (remote control, welding torch control lead, etc.)
12	+	**Connection socket, “+” welding current** • MIG/MAG welding: welding current connection for the welding torch • MIG/MAG cored wire welding: workpiece connection • MMA welding: workpiece connection
13	—	**Connection socket, “-” welding current** • MIG/MAG welding: workpiece connection • MIG/MAG cored wire welding: welding current connection for the welding torch • MMA welding: electrode holder connection
14		**Welding current cable, polarity selection** Welding current to the central connector/torch, enables polarity selection. • MIG/MAG: Connection socket for “+” welding current • Self-shielding cored wire
15		**Protective cap (see Sect. "Protective cap")**

4.1.2 Rear view

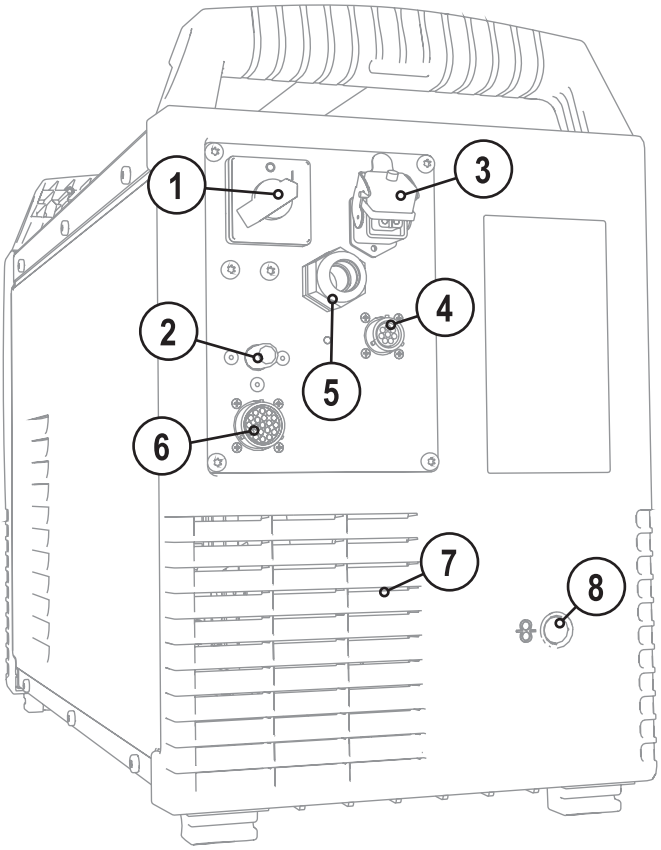

Figure 4-2

Item	Symbol	Description
1		**Main switch, machine on/off**
2		**Connecting nipple G¼, shielding gas connection**
3		**4-pole connection socket** Cooling unit voltage supply
4		**8-pole connection socket** Cooling unit control lead
5		**Mains connection cable**
6	analog	**19-pole interface for mechanised welding (analogue), optional** (see “Design and function“ chapter)
7		**Cooling air outlet**
8		**External wire feed inlet** Pre-cut casing inlet for external wire feed.

4.2 Machine control – Operating elements

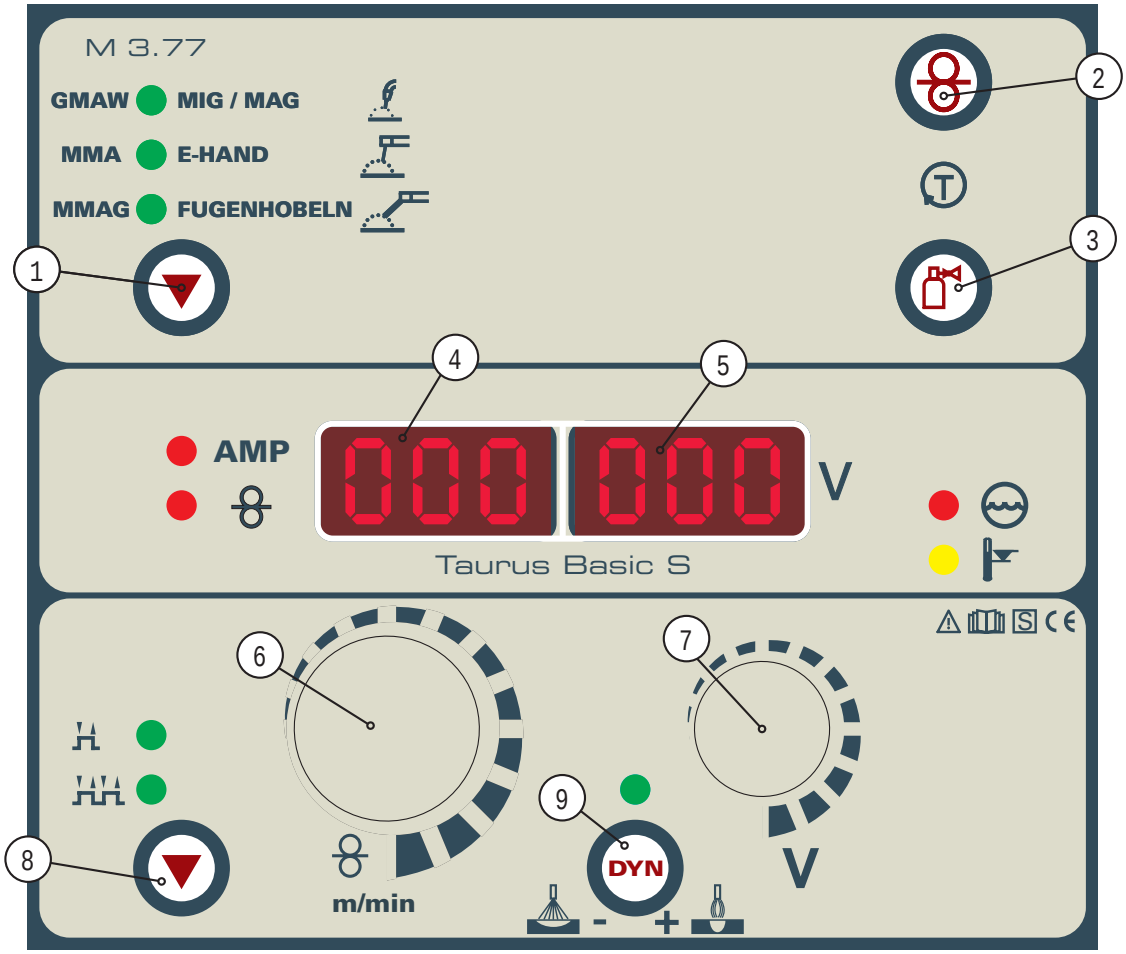

Figure 4-3

Item	Symbol	Description
1		**Button, welding process** GMAW MIG / MAG — MIG/MAG welding MMA E-HAND — MMA welding MMAG FUGENHOBELN — Air arc gouging
2		**Wire inching button** See also “Inching the Wire Electrode” chapter
3		**Gas test / rinse button** • Gas test: For setting the shielding gas quantity • Rinse: For rinsing longer tube packages See also "Shielding Gas Supply" chapter
4	000	**Display, left** Welding current as actual value or hold value, wire-feed speed as nominal value.
5	000	**Display, right** Welding voltage
6	m/min	**Rotary dial, wire speed** Wire speed setting 0.5 to 24 m/min
7	V	**Rotary dial, welding voltage** Adjustment of the welding voltage from min. to max. (twin-knob operation: wire speed/welding voltage)

Item	Symbol	Description
8		**Operating mode changeover switch** Switching between non-latched and latched operating modes Non-latched operation Latched operation
9	DYN	**Dynamics/choke effect button** Arc harder and narrower Arc softer and wider

4.2.1 Operating elements in the machine

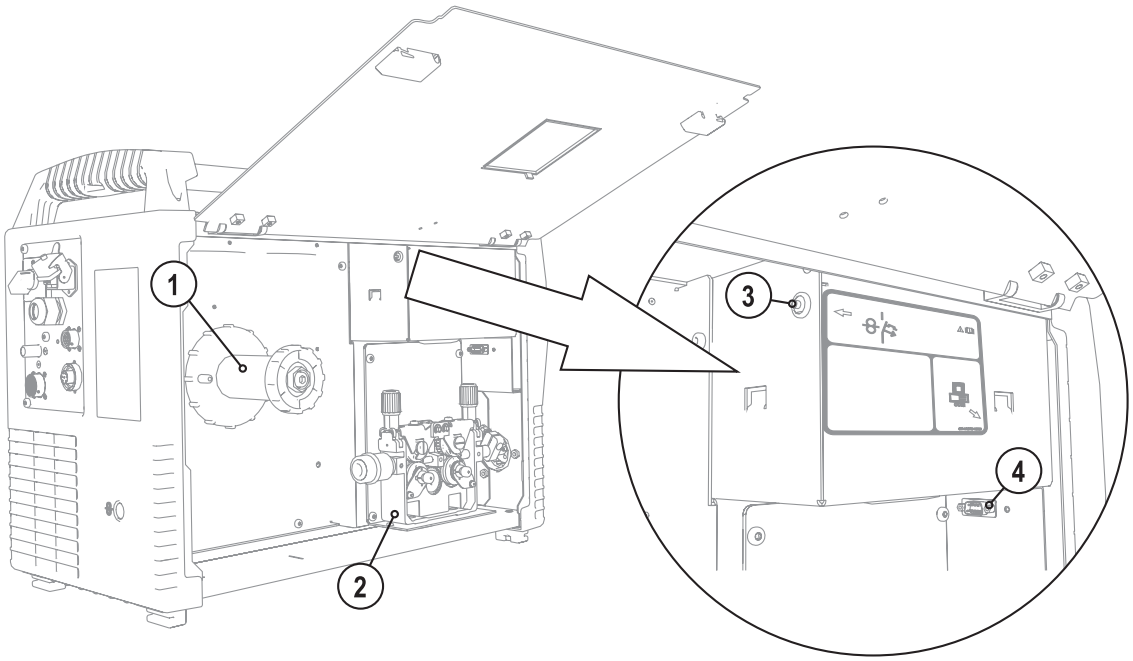

Figure 4-4

Item	Symbol	Description
1		**Wire spool retainer**
2		**Wire delivery unit**
3	42V/4A	**Key button, automatic cutout** Wire feed motor supply voltage fuse press to reset a triggered fuse
4	COM	**PC interface, serial (D-Sub connection socket, 9-pole)**

5 Design and function

5.1 General

WARNING

Risk of injury from electric shock!
Contact with live parts, e.g. welding current sockets, is potentially fatal!

- Follow safety instructions on the opening pages of the operating instructions.
- Commissioning may only be carried out by persons who have the relevant expertise of working with arc welding machines!
- Connection and welding leads (e.g. electrode holder, welding torch, workpiece lead, interfaces) may only be connected when the machine is switched off!

CAUTION

Risk of burns on the welding current connection!
If the welding current connections are not locked, connections and leads heat up and can cause burns, if touched!

- Check the welding current connections every day and lock by turning in clockwise direction, if necessary.

Risk of injury due to moving parts!
The wire feed units are equipped with moving parts, which can trap hands, hair, clothing or tools and thus injure persons!

- Do not reach into rotating or moving parts or drive components!
- Keep casing covers closed during operation!

Risk of injury due to welding wire escaping in an unpredictable manner!
Welding wire can be conveyed at very high speeds and, if conveyed incorrectly, may escape in an uncontrolled manner and injure persons!

- Before mains connection, set up the complete wire guide system from the wire spool to the welding torch!
- Remove the counter pressure rollers from the wire feed unit if no welding torch is fitted!
- Check wire guide at regular intervals!
- Keep all casing covers closed during operation!

Risk from electrical current!
If welding is carried out alternately using different methods and if a welding torch and an electrode holder remain connected to the machine, the open-circuit/welding voltage is applied simultaneously on all cables.

- The torch and the electrode holder should therefore always be placed on an insulated surface before starting work and during breaks.

CAUTION

Damage due to incorrect connection!
Accessory components and the power source itself can be damaged by incorrect connection!

- Only insert and lock accessory components into the relevant connection socket when the machine is switched off.
- Comprehensive descriptions can be found in the operating instructions for the relevant accessory components.
- Accessory components are detected automatically after the power source is switched on.

Using protective dust caps!
Protective dust caps protect the connection sockets and therefore the machine against dirt and damage.

- The protective dust cap must be fitted if there is no accessory component being operated on that connection.
- The cap must be replaced if faulty or if lost!

5.2 Installation

WARNING

Risk of accident due to improper transport of machines that may not be lifted!
Do not lift or suspend the machine! The machine can fall down and cause injuries! The handles and brackets are suitable for transport by hand only!

- The machine may not be lifted by crane or suspended!

CAUTION

Installation site!
The machine must not be operated in the open air and must only be set up and operated on a suitable, stable and level base!

- The operator must ensure that the ground is non-slip and level, and provide sufficient lighting for the place of work.
- Safe operation of the machine must be guaranteed at all times.

CAUTION

Damage to the machine due to improper transport!
The machine can be damaged by tensile or lateral forces if it is set down or picked up in a non-vertical position!

- Do not drag the machine horizontally on the machine feet!
- Always pick up the machine vertically and set it down carefully.

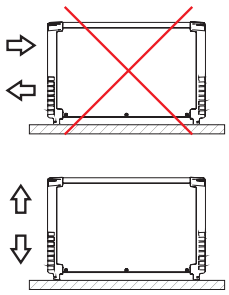

5.2.1 Protective cap

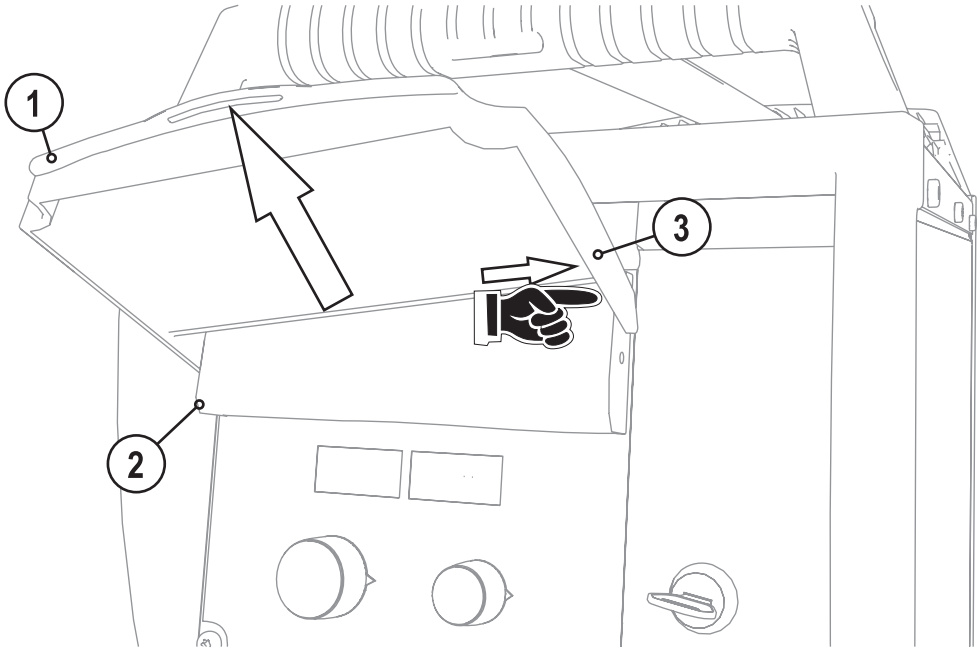

Figure 5-1

Item	Symbol	Description
1		**Protective cap**
2		**Lid**
3		**Bracket, protective cap**

To change or replace the protective flap:

- Push the right-hand bracket of the protective cap to the right and remove the protective cap.

5.3 Machine cooling

To obtain an optimal duty cycle from the power components, the following precautions should be observed:

- Ensure that the working area is adequately ventilated.
- Do not obstruct the air inlets and outlets of the machine.
- Do not allow metal parts, dust or other objects to get into the machine.

5.4 Workpiece lead, general

CAUTION

Risk of burns due to incorrect connection of the workpiece lead!
Paint, rust and dirt on the connection restrict the power flow and may lead to stray welding currents.
Stray welding currents may cause fires and injuries!

- Clean the connections!
- Fix the workpiece lead securely!
- Do not use structural parts of the workpiece as a return lead for the welding current!
- Take care to ensure faultless power connections!

5.5 Mains connection

DANGER

Hazard caused by improper mains connection!
An improper mains connection can cause injuries or damage property!

- Only use machine with a plug socket that has a correctly fitted protective conductor.
- If a mains plug must be fitted, this may only be carried out by an electrician in accordance with the relevant national provisions or regulations (any phase sequence for three-phase machines)!
- Mains plug, socket and lead must be checked regularly by an electrician!
- When operating the generator always ensure it is earthed as stated in the operating instructions. The resulting network has to be suitable for operating devices according to protection class 1.

5.5.1 Mains configuration

NOTE

The machine may be connected to:

- **a three-phase system with four conductors and an earthed neutral conductor**
- **a three-phase system with three conductors of which any one can be earthed, e.g. the outer conductor**

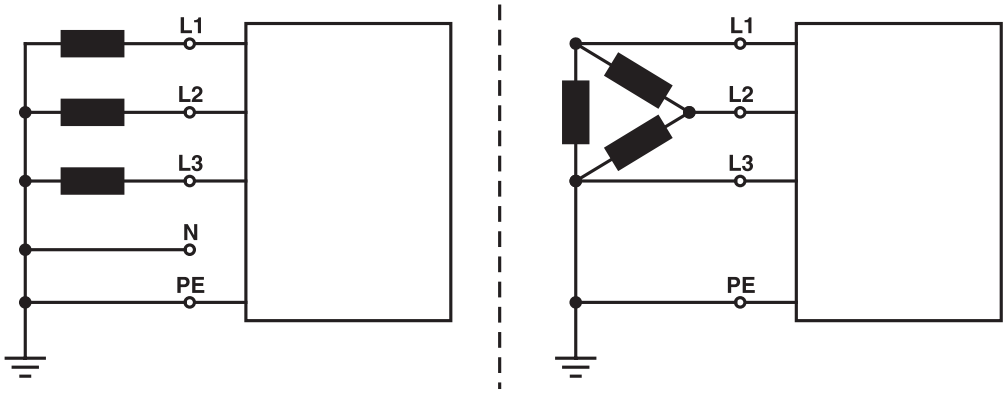

Figure 5-2

Legend

Item	Designation	Colour code
L1	Outer conductor 1	black
L2	Outer conductor 2	brown
L3	Outer conductor 3	grey
N	Neutral conductor	blue
PE	Protective conductor	green-yellow

CAUTION

Operating voltage - mains voltage!
The operating voltage shown on the rating plate must be consistent with the mains voltage, in order to avoid damage to the machine!

- For mains fuse protection, please refer to the “Technical data” chapter!

- Insert mains plug of the switched-off machine into the appropriate socket.

5.6 Cooling module connection

NOTE

Observe the fitting and connection instructions given in the relevant operating instructions for the cooling unit.

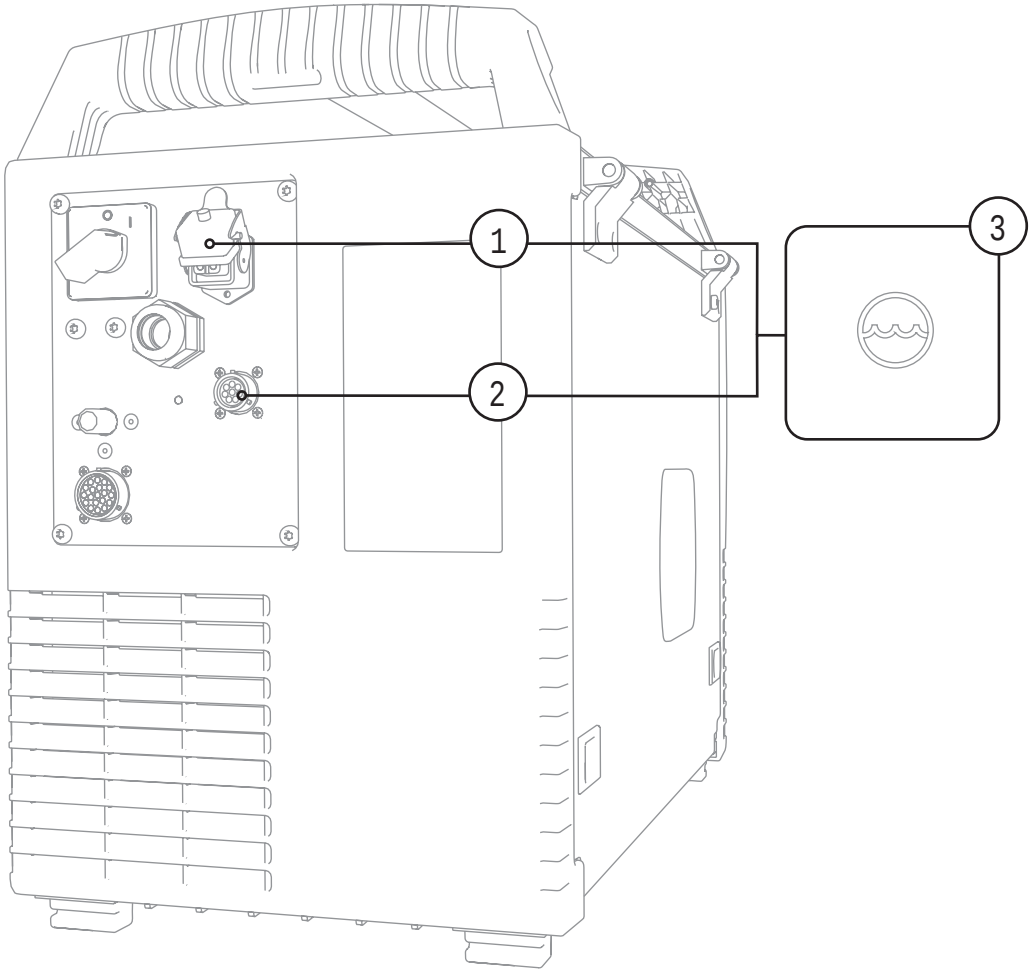

Figure 5-3

Item	Symbol	Description
1		**4-pole connection socket** Cooling unit voltage supply
2		**8-pole connection socket** Cooling unit control lead
3		**Cooling module**

- Insert and lock the 8-pole control lead plug on the cooling unit into the 8-pole connection socket on the welding machine.
- Insert and lock the 4-pole supply plug on the cooling unit into the 4-pole connection socket on the welding machine.

5.7 MIG/MAG welding

5.7.1 Welding torch and workpiece line connection

NOTE

Fault with the wire guide!
On delivery, the central connector (Euro) is fitted with a capillary tube for welding torches with spiral guides. Conversion is necessary if a welding torch with a plastic core is used!
Welding torch with plastic core:
- use with guide tube!

Welding torch with spiral guide:
- use with capillary tube!

Depending on the wire electrode diameter or type, either a spiral guide or plastic core with the correct inner diameter has to be inserted in the torch!
Recommendation:
- Use a spiral guide to weld hard, unalloyed wire electrodes (steel).
- Use a plastic core to weld or braze soft, high-alloy wire electrodes or aluminium materials.

Preparation for connecting welding torches with a plastic core:
- Push forward the capillary tube on the wire feed side in the direction of the central connector and remove it there.
- Slide plastic core guide tube off the central connector.
- Carefully insert the central plug for the welding torch, with the still oversized plastic liner, into the central connector and screw together with crown nut.
- Use a suitable tool to cut off the plastic liner just before the wire feed roller, making sure not to pinch it.
- Unfasten and remove the central plug on the welding torch.
- Cleanly remove the burr from the separated end of the plastic core!

Preparation for connecting welding torches with a spiral guide:
- Check that the capillary tube is correctly positioned in relation to the central connector!

5.7.1.1 MIG/MAG standard welding

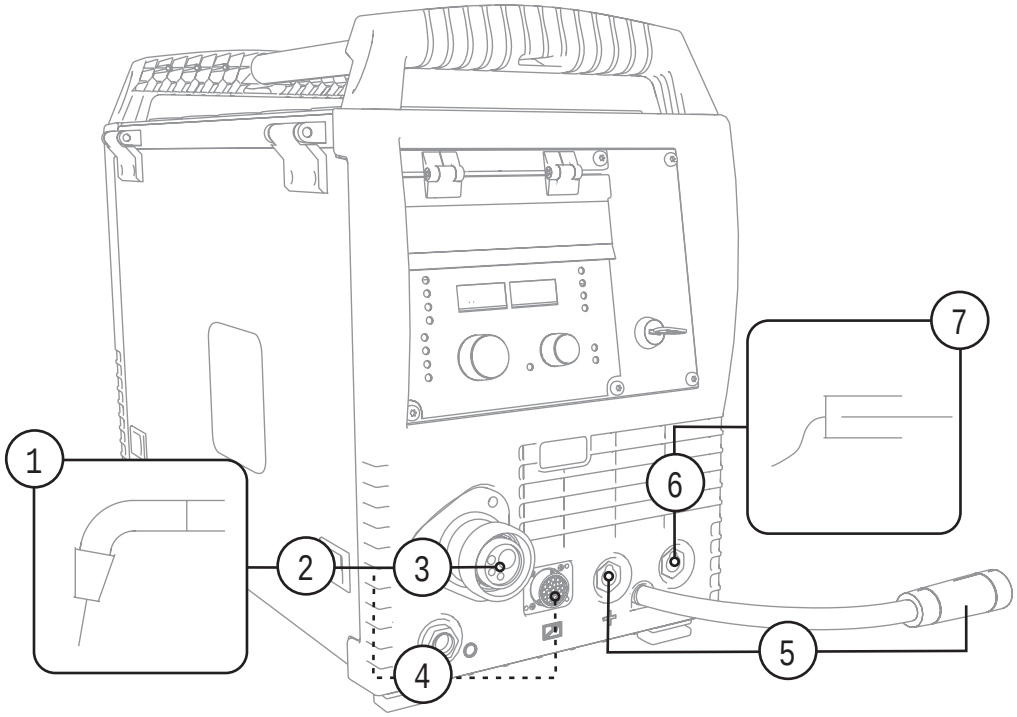

Figure 5-4

Item	Symbol	Description
1		**Welding torch**
2		**Welding torch hose package**
3		**Central connection for welding torch (Euro)** Integrated welding current, shielding gas and torch trigger
4		**19-pole connection socket (analogue)** Connection for welding torch control lead
5		**Welding current cable, polarity selection** Welding current to central connection/torch. Permits polarity selection for MIG/MAG welding. • Standard applications: Connection for "+" welding current connection socket
6		**"-" welding current connection socket** • MIG/MAG welding: Workpiece connection
7		**Workpiece**

- Insert the central plug for the welding torch into the central connector and screw together with crown nut.
- Insert the plug on the workpiece lead into the "-" welding current connection socket and lock.
- Welding current lead, insert polarity selection into the "+" welding current connection socket and lock.

Where applicable:

Only MIG/MAG torches with special functions (additional control lead):

- Insert the torch control lead plug into the 19-pole connection socket and lock in place.

5.7.1.2 MIG/MAG cored wire welding with a negative wire electrode

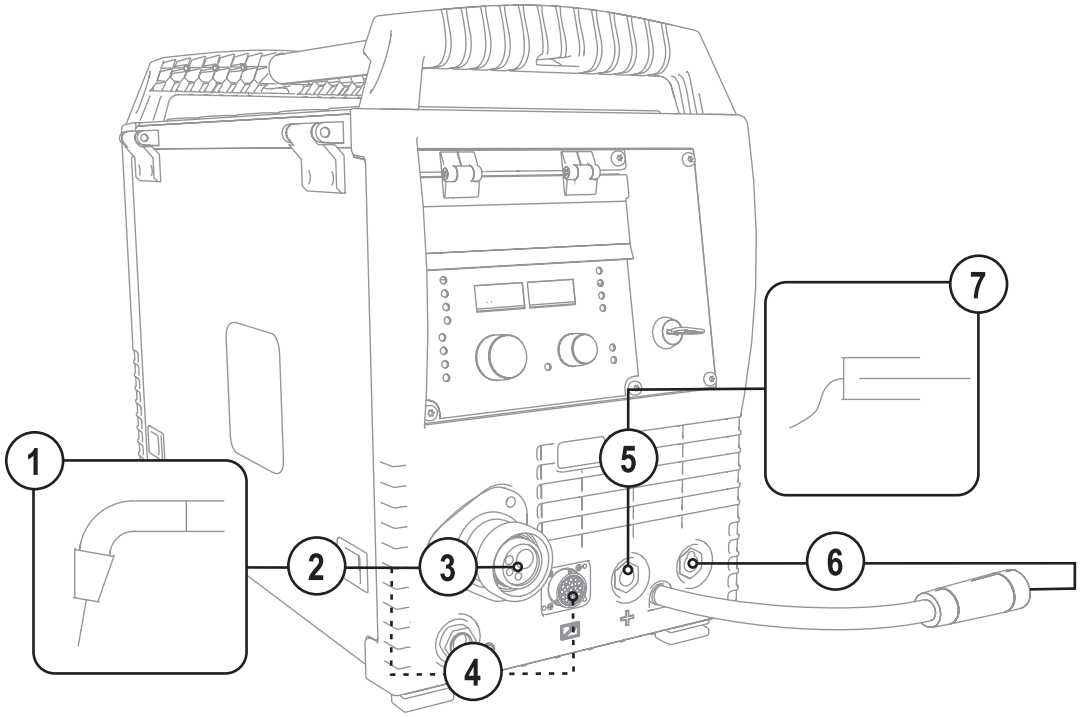

Figure 5-5

Item	Symbol	Description
1		**Welding torch**
2		**Welding torch hose package**
3		**Central connection for welding torch (Euro)** Integrated welding current, shielding gas and torch trigger
4		**19-pole connection socket (analogue)** Connection for welding torch control lead
5		**Connection socket, “+” welding current**
6		**Connection socket, “-” welding current**
7		**Workpiece**

- Insert the central plug for the welding torch into the central connector and screw together with crown nut.
- Insert the plug on the workpiece lead into the "+" welding current connection socket and lock.
- Welding current lead, insert polarity selection into the "-" welding current connection socket and lock.

Where applicable:

Only MIG/MAG torches with special functions (additional control lead):

- Insert the torch control lead plug into the 19-pole connection socket and lock in place.

5.7.1.3 MIG/MAG cored wire welding with a positive wire electrode

NOTE

To connect the positive wire electrode, follow the procedure in the "MIG/MAG standard welding" chapter!

5.7.2 Inserting the wire spool

NOTE

Standard D300 pin reels can be used. Adapters (see accessories) are required when using standardised basket coils (DIN 8559).

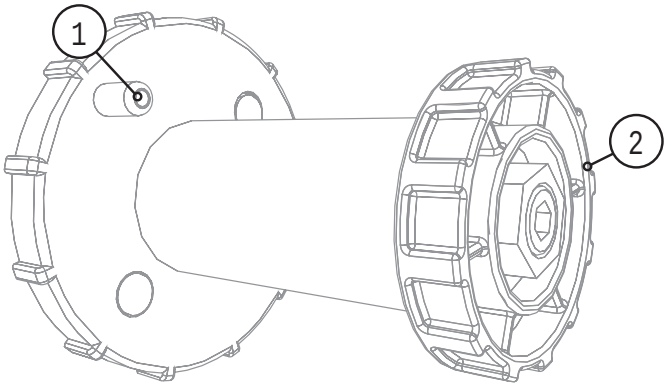

Figure 5-6

Item	Symbol	Description
1		**Carrier pin** For fixing the wire spool
2		**Knurled nut** For fixing the wire spool

- Loosen knurled nut from spool holder.
- Fix welding wire reel onto the spool holder so that the carrier pin locks into the spool bore.
- Fasten wire spool using knurled nut.

5.7.3 Changing the wire feed rollers

NOTE

Unsatisfactory welding results due to faulty wire feeding!
Wire feed rollers must be suitable for the diameter of the wire and the material.

- Check the roller label to verify that the rollers are suitable for the wire diameter. Turn or change if necessary!
- use V-Nut rollers with for steel wires and other hard wires,
- use U-Nut rollers for aluminium wires and other soft, alloyed wires.

- Slide new drive rollers into place so that the diameter of the wire used is visible on the drive roller.
- Screw the drive rollers in place with knurled screws.

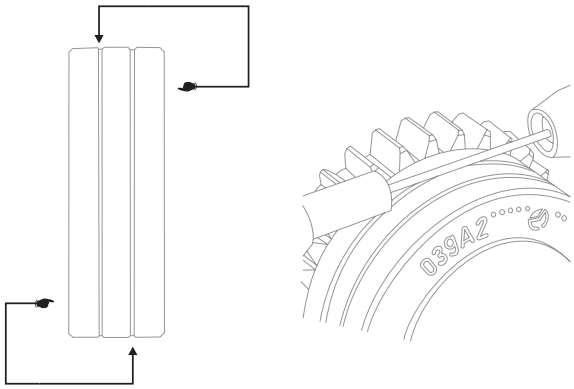

Figure 5-7

5.7.4 Inching the wire electrode

CAUTION

Risk of injury due to welding wire escaping from the welding torch!
The welding wire can escape from the welding torch at high speed and cause bodily injury including injuries to the face and eyes!

- Never direct the welding torch towards your own body or towards other persons!

Risk of injury due to moving parts!
The wire feed units are equipped with moving parts, which can trap hands, hair, clothing or tools and thus injure persons!

- Do not reach into rotating or moving parts or drive components!
- Keep casing covers closed during operation!

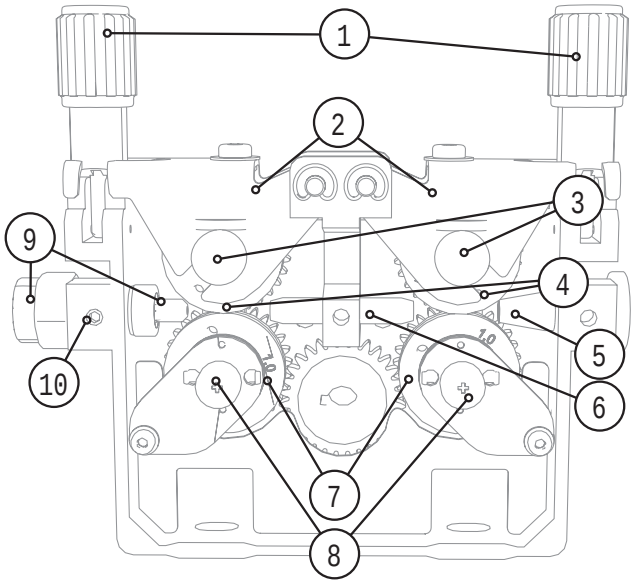

Figure 5-8

NOTE

Depending on the design of the machine, the design of the wire feed may be the reverse of that shown!

Item	Symbol	Description
1		**Pressure units**
2		**Clamping units**
3		**Knurled nut** For fixing the wire spool
4		**Counterpressure rollers**
5		**Wire holding nipple**
6		**Guide tube**
7		**Drive rollers**
8		**"Undetachable" knurled screws**
9		**Wire feed nipple with wire stabiliser**
10		**"Wire inlet nipple" fixing screw**

- Extend and lay out the torch tube package.
- Unfasten pressure units and fold out (clamping units and counter-pressure rollers will automatically flip upwards).
- Unwind welding wire carefully from the wire spool and insert through the wire inlet nipple over the drive roller grooves and the guide pipe into the capillary tube and Teflon core using guide pipe.
- Press the clamping element with the counter pressure roller back downwards and fold the wire units back up again (wire electrode should be in the groove on the drive roller).
- Set the contact pressure with the adjusting nuts of the pressure unit.
- Press the wire inching button until the wire electrode projects out of the welding torch.

CAUTION

Extensive wear due to incorrect contact pressure!
Incorrect contact pressure will cause extensive wear of the wire feed rollers!
- With the adjusting nuts of the pressure units set the contact pressure so that the wire electrode is conveyed but will still slip through if the wire spool jams.
- Set the contact pressure of the front rollers (in wire feed direction) to a higher value!

5.7.5 Spool brake setting

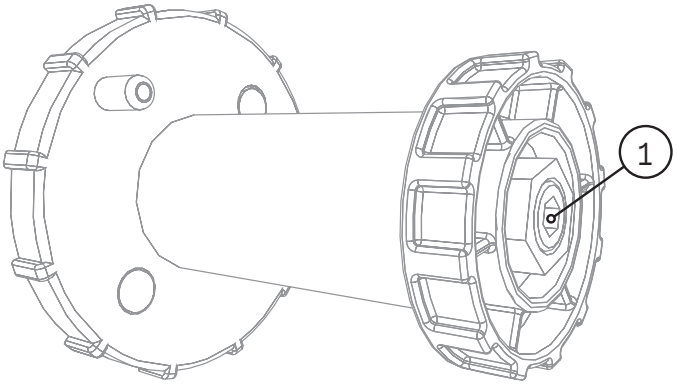

Figure 5-9

Item	Symbol	Description
1		**Allen screw** Securing the wire spool retainer and adjustment of the spool brake

- Tighten the Allen screw (8 mm) in the clockwise direction to increase the braking effect.

NOTE

Do not jam the wire spool!
Tighten the spool brake until the wire spool no longer turns when the wire feed motor stops but without it jamming during operation!
The fixing of the pin reel must be checked if the hexagonal socket screw is released.
See chapter “Fixing of the pin reel (adjustment of the pre-tensioning)”

5.7.6 Welding task selection

5.7.6.1 Basic welding parameters

Operating element	Action	Result
GMAW MIG / MAG		Welding process selection Signal light GMAW MIG / MAG on.

5.7.6.2 Operating mode

Operating element	Action	Result	
		Operating mode selection The signal light indicates the selected operating mode. Non-latched operation Latched operation	No change

The operating point is set with the wire speed and arc length rotary dials.

The operating point setting can also be specified using accessory components such as remote control, welding torch, etc.

5.7.6.3 Setting the operating point (welding output)

The M3.77 control works according to the twin-knob operation principle. To set the operating point, only the wire speed and the welding voltage need to be set according to the material and the electrode diameter.

Operating element	Action	Result
m/min		Wire speed setting 0,5 bis 24 m/min
V		Welding voltage setting 10 V bis 49,8 V

5.7.6.4 Choke effect / dynamics

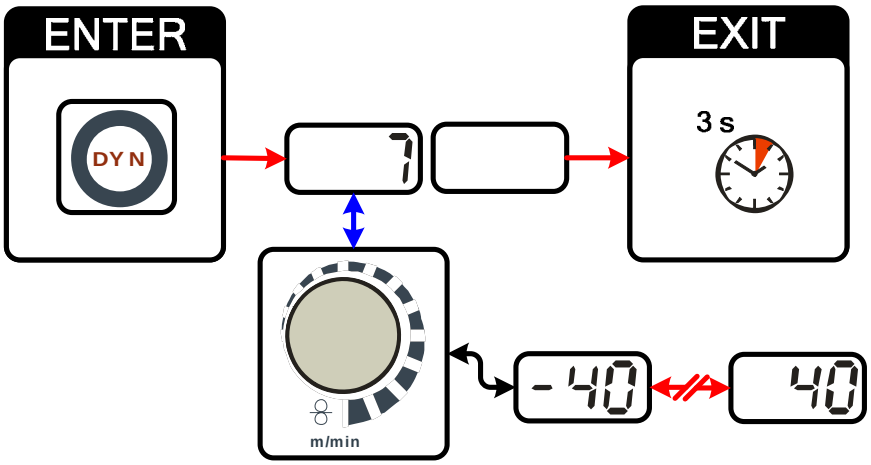

Figure 5-10

Display	Setting/selection
7	**Dynamics setting** 40: Arc harder and narrower -40: Arc softer and wider

5.7.6.5 Accessory components for operating point setting

The operating point setting can also be made with the accessory components

- R11/RG11 remote control
- Up/Down torch with two rockers (2 U/D)

You will find an overview of accessory components in the "Accessories" chapter. See the operating instructions for the machine in question for a more detailed description of the individual machines and their functions.

5.7.7 MIG/MAG welding data display

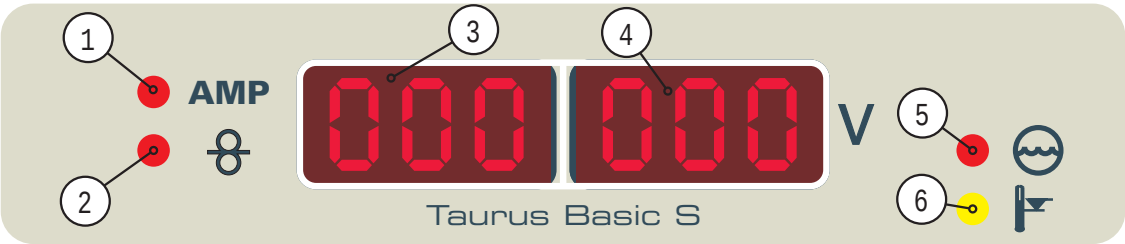

Figure 5-11

Item	Symbol	Description
1		**Signal light, AMP** During welding, the left display shows the actual welding current value. After welding, the welding current hold value is displayed.
2		**Signal light, WF** The left display shows the nominal value for the wire feed
3	000	**Display, left** Welding current as actual value or hold value, wire-feed speed as nominal value.
4	000	**Display, right** Welding voltage
5		**Signal light, coolant fault** Low coolant level
6		**Signal light, excess temperature** Excess temperature, welding machine

5.7.8 MIG/MAG functional sequences / operating modes

NOTE

Welding parameters such as gas pre-flows wire burn-back etc. are pre-set with optimal values for numerous applications. These values can, however, be changed with the PC300.NET software as required.

5.7.8.1 Explanation of signs and functions

Symbol	Meaning
	Press torch trigger
	Release torch trigger
	Tap torch trigger (press briefly and release)
	Shielding gas flowing
I	Welding output
	Wire electrode is being conveyed
	Wire creep
	Wire burn-back
	Gas pre-flows
	Gas post-flows
	Non-latched
	Latched
t	Time
PSTART	Ignition program
PA	Main program
PEND	End program

Non-latched mode

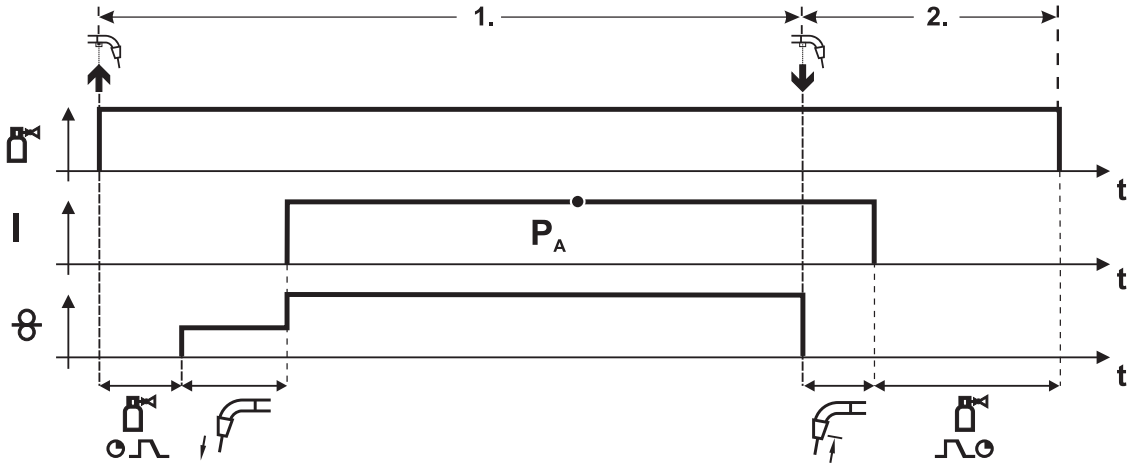

Figure 5-12

Step 1

- Press and hold torch trigger.
- Shielding gas is expelled (gas pre-flows).
- Wire feed motor runs at “creep speed”.
- Arc ignites after the wire electrode makes contact with the workpiece; welding current flows.
- Change over to pre-selected wire speed.

Step 2

- Release torch trigger.
- WF motor stops.
- Arc is extinguished after the preselected wire burn-back time expires.
- Gas post-flow time elapses.

Latched mode

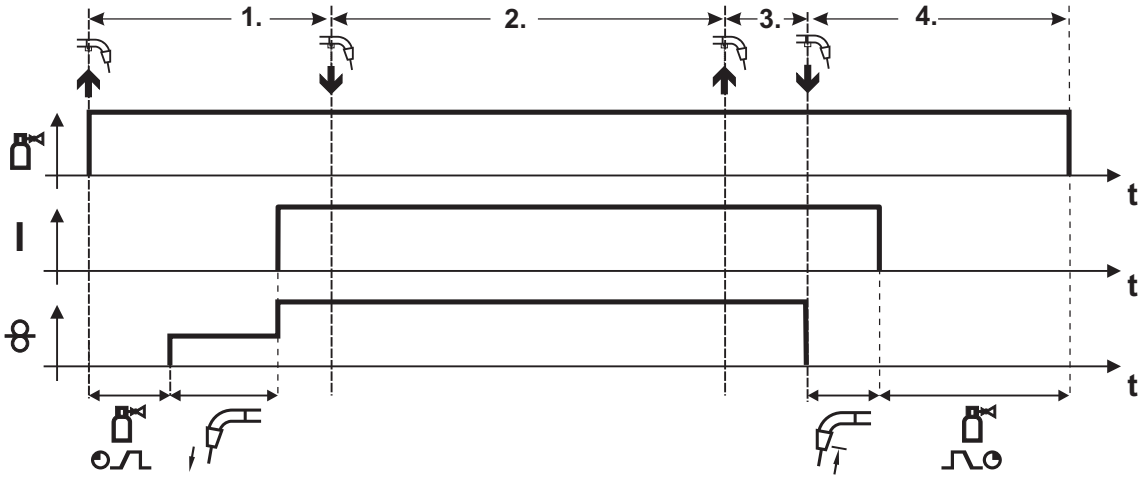

Figure 5-13

Step 1
- Press and hold torch trigger
- Shielding gas is expelled (gas pre-flows)
- Wire feed motor runs at “creep speed”.
- Arc ignites after the wire electrode makes contact with the workpiece; welding current flows.
- Change over to pre-selected WF speed (main program P_A).

Step 2
- Release torch trigger (no effect)

Step 3
- Press torch trigger (no effect)

Step 4
- Release torch trigger
- WF motor stops.
- Arc is extinguished after the preselected wire burn-back time expires.
- Gas post-flow time elapses.

5.7.9 Standard MIG/MAG torch

The MIG welding torch trigger is essentially used to start and stop the welding process.

Operating elements	Functions
Torch trigger	• Start/stop welding

5.7.10 MIG/MAG special-torches

Function specifications and more indepth information can be found in the operating manual for the relevant welding torch!

The following special torches can be used together with this welding machine:

- UP/DOWN welding torch with two rocker buttons
  - for setting the wire-feed speed and
  - for setting the welding performance.

5.7.11 Remote control

Remote controls are operated on the 19-pole remote control connection socket (analogue). If required, extension cables are available in different lengths (see chapter "Accessories").

- The remote control is detected automatically when the welding machine is switched on.

Features:

- Setting the operating point via the wire speed (single-dial operation)
- Arc length correction

5.8 Shielding gas supply

5.8.1 Connecting the shielding gas supply

WARNING

Incorrect handling of shielding gas cylinders!
Incorrect handling of shielding gas cylinders can result in serious and even fatal injury.

- Observe the instructions from the gas manufacturer and in any relevant regulations concerning the use of compressed air!
- Place shielding gas cylinders in the holders provided for them and secure with fixing devices.
- Avoid heating the shielding gas cylinder!

CAUTION

Faults in the shielding gas supply.
An unhindered shielding gas supply from the shielding gas cylinder to the welding torch is a fundamental requirement for optimum welding results. In addition, a blocked shielding gas supply may result in the welding torch being destroyed.

- Always re-fit the yellow protective cap when not using the shielding gas connection.
- All shielding gas connections must be gas tight.

NOTE

Before connecting the pressure regulator to the gas cylinder, open the cylinder valve briefly to expel any dirt.

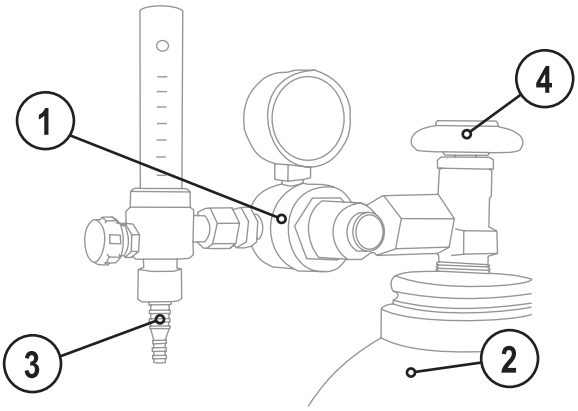

Figure 5-14

Item	Symbol	Description
1		**Pressure regulator**
2		**Shielding gas cylinder**
3		**Output side of the pressure regulator**
4		**Cylinder valve**

- Place the shielding gas cylinder into the relevant cylinder bracket.
- Secure the shielding gas cylinder using a securing chain.
- Tighten the pressure regulator screw connection on the gas bottle valve to be gas-tight.
- Tighten gas hose on pressure reducer to be gas tight.
- Fit the gas hose and G1/4" crown nut onto the relevant connection on the welding machine, and fit the wire feed unit (if present on this version).

5.8.2 Gas test

- Slowly open the gas cylinder valve.
- Open the pressure reducer.
- Switch on the power source at the main switch.
- Initiate gas test function on the machine control.
- Set the relevant gas quantity for the application on the pressure reducer.
- The gas test is triggered on the machine control by pressing the button briefly.

Shielding gas flows for around 25 seconds or until the button is pressed again.

- The gas test is triggered on the machine control by pressing the button briefly.

Shielding gas flows for around 25 seconds or until the button is pressed again.

5.8.3 “Rinse tube package” function

Operating Element	Action	Result
	5 s	Select rinse tube package. Shielding gas flows continuously until the Gas Test button is pressed again.

5.8.4 Setting the shielding gas quantity

Welding process	Recommended shielding gas quantity
MAG welding	Wire diameter x 11.5 = l/min
MIG brazing	Wire diameter x 11.5 = l/min
MIG welding (aluminium)	Wire diameter x 13.5 = l/min (100 % argon)

Helium-rich gas mixtures require a higher gas volume!
The table below can be used to correct the gas volume calculated where necessary:

Shielding gas	Factor
75% Ar/25% He	1.14
50% Ar/50% He	1.35
25% Ar/75% He	1.75
100% He	3.16

NOTE

☛ **Incorrect shielding gas setting!**
If the shielding gas setting is too low or too high, this can introduce air to the weld pool and may cause pores to form.
- Adjust the shielding gas quantity to suit the welding task!

5.9 MMA welding

CAUTION

Risk of being crushed or burnt.
When replacing spent or new stick electrodes

- Switch off machine at the main switch
- Wear appropriate safety gloves
- Use insulated tongs to remove spent stick electrodes or to move welded workpieces and
- Always put the electrode holder down on an insulated surface.

5.9.1 Connecting the electrode holder and workpiece lead

NOTE

The polarity depends on the manufacturer instructions given on the filler material packaging.

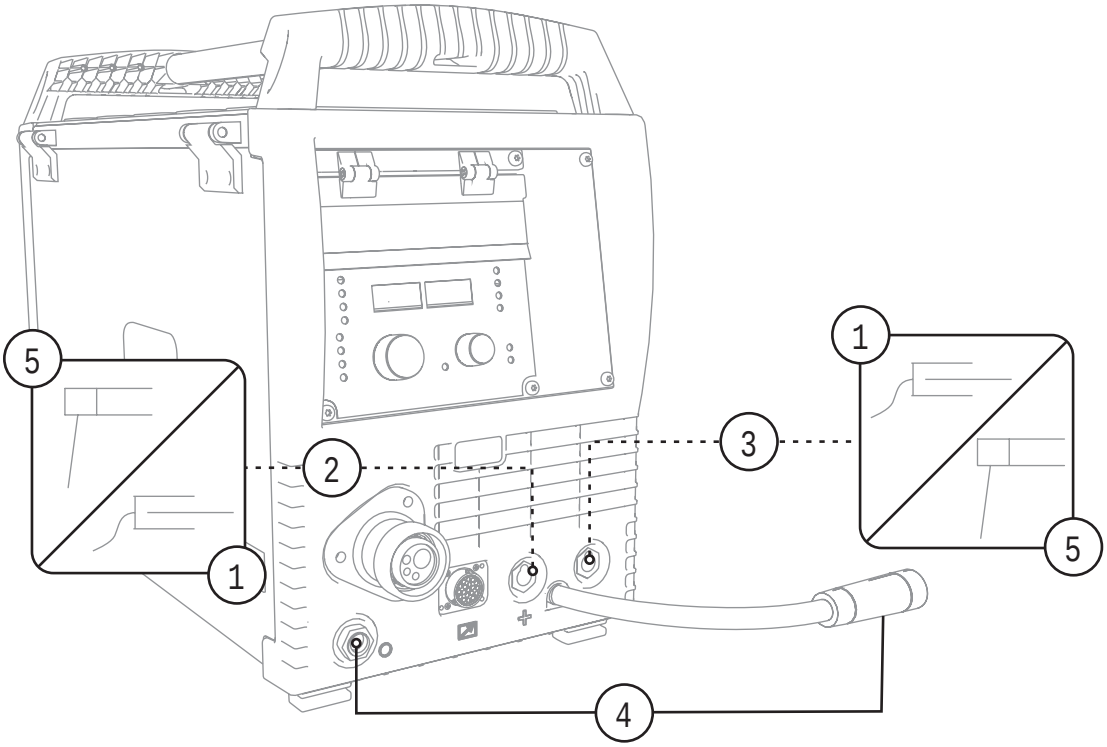

Figure 5-15

Item	Symbol	Description
1		**Workpiece**
2	+	**Connection socket, "+" welding current** • MMA welding: Workpiece connection
3	–	**"-" welding current connection socket** • MMA welding: electrode holder connection
4	O	**Park socket, polarity selection plug** Retainer for the polarity selection plug in MMA mode or for transport.
5		**Electrode holder**

- Insert cable plug of the electrode holder into either the "+" or "-" welding current connection socket and lock by turning to the right.
- Insert cable plug of the workpiece lead into either the "+" or "-" welding current connection socket and lock by turning to the right.
- Insert the polarity selection plug in the park socket and lock in place by turning to the right.

5.9.2 Welding task selection

Operating element	Action	Result
MMA E-HAND		Welding process selection Signal light MMA E-HAND on.

Operating element	Action	Result
MMAG FUGENHOBELN		Welding process selection Signal light MMAG FUGENHOBELN on.

NOTE

Special electrode holders and carbon electrodes are required for air arc gouging.

5.9.3 Welding current setting

The welding current is normally set using the "Wire speed" rotary dial.

Operating element	Action	Result	Displays
m/min		Welding current is set	Setpoint setting

5.9.4 Arcforce

Operating element	Action	Result	Display
DYN		Select arcforcing welding parameter LED for the button ● is on.	0
m/min		Arcforcing setting for electrode types: (Setting range -40 to 40) Negative values Rutile Values around zero Basic Positive values Cellulose	40 -40

5.9.5 Hotstart

The hotstart device improves the ignition of the stick electrodes using an increased ignition current.

a) = Hotstart time
b) = Hotstart current
I = Welding current
t = Time

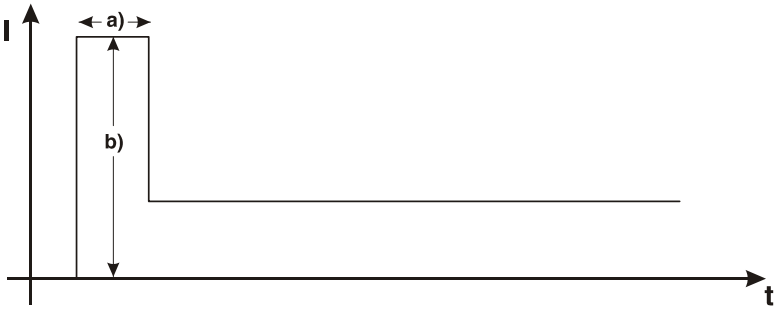

Figure 5-16

5.9.6 Antistick

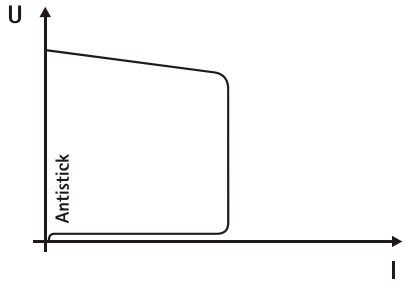

Anti-stick prevents the electrode from annealing.
If the electrode sticks in spite of the Arcforce device, the machine automatically switches over to the minimum current within about 1 second to prevent the electrode from overheating. Check the welding current setting and correct according to the welding task!

Figure 5-17

5.10 Interfaces

CAUTION

Damage due to the use of non-genuine parts!
The manufacturer's warranty becomes void if non-genuine parts are used!

- Only use system components and options (power sources, welding torches, electrode holders, remote controls, spare parts and replacement parts, etc.) from our range of products!
- Only insert and lock accessory components into the relevant connection socket when the machine is switched off.

Damage due to incorrect connection!
Accessory components and the power source itself can be damaged by incorrect connection!

- Only insert and lock accessory components into the relevant connection socket when the machine is switched off.
- Comprehensive descriptions can be found in the operating instructions for the relevant accessory components.
- Accessory components are detected automatically after the power source is switched on.

5.10.1 Automation interface

NOTE

These accessory components can be retrofitted as an option, see Accessories chapter.

Pin	Input / output	Description		Diagram
A	Output	PE	Connection for cable shielding	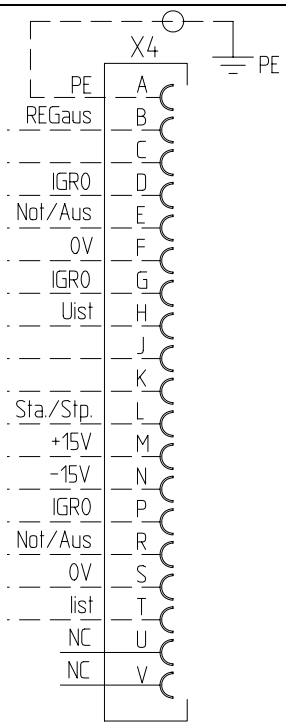
D	Output (open collector)	IGRO	Current flows signal I>0 (maximum load 20 mA / 15 V) 0 V = welding current flows	
E **+** **R**	Input	Not/Aus	Emergency stop for higher level shut-down of the power source. To use this function, jumper 1 must be unplugged on PCB M320/1 in the welding machine. Contact open = welding current off	
F	Output	0 V	Reference potential	
G/P	Output	I>0	Power relay contact, galvanically isolated (max. +/-15 V / 100 mA)	
H	Output	Uist	Welding voltage, measured against pin F, 0-10 V (0 V = 0 V; 10 V = 100 V)	
L	Input	Str/Stp	Start = 15 V / Stop = 0 V [1)]	
M	Output	+15 V	Voltage supply (max. 75 mA)	
N	Output	-15 V	Voltage supply (max. 25 mA)	
S	Output	0 V	Reference potential	
T	Output	Iist	Welding current, measured on pin F; 0-10 V (0 V = 0 A, 10 V = 1000 A)	

[1]) The operating mode is given by the wire feed unit (the start / stop function equates to pressing the torch trigger and is used in mechanised applications, for example).

5.10.2 PC Interfaces

CAUTION

Equipment damage or faults may occur if the PC is connected incorrectly!
Not using the SECINT X10USB interface results in equipment damage or faults in signal transmission. The PC may be destroyed due to high frequency ignition pulses.

- Interface SECINT X10USB must be connected between the PC and the welding machine!
- The connection must only be made using the cables supplied (do not use any additional extension cables)!

PC 300 welding parameter software

Create all welding parameters quickly on the PC and easily transfer them to one or more welding machines (accessories: set consisting of software, interface, connection leads).

6 Maintenance, care and disposal

DANGER

Risk of injury from electric shock!
Cleaning machines that are not disconnected from the mains can lead to serious injuries!

- Disconnect the machine completely from the mains.
- Remove the mains plug!
- Wait for 4 minutes until the capacitors have discharged!

6.1 General

When used in the specified environmental conditions and under normal operating conditions, this machine is largely maintenance-free and requires a minimum of care.

There are some points, which should be observed, to guarantee fault-free operation of your welding machine. Among these are regular cleaning and checking as described below, depending on the pollution level of the environment and the length of time the unit is in use.

6.2 Maintenance work, intervals

6.2.1 Daily maintenance tasks

- Mains supply lead and its strain relief
- Welding current cables (check that they are fitted correctly and secured)
- Gas tubes and their switching equipment (solenoid valve)
- Gas cylinder securing elements
- Operating, message, safety and adjustment devices (Functional test)
- Other, general condition

6.2.2 Monthly maintenance tasks

- Casing damage (front, rear and side walls)
- Transport rollers and their securing elements
- Transport elements (strap, lifting lugs, handle)
- Selector switches, command devices, emergency stop devices, voltage reducing devices, message and control lamps
- Check coolant tubes and their connections for impurities
- Check that the wire guide elements (inlet nipple, wire guide tube) are fitted securely.

6.2.3 Annual test (inspection and testing during operation)

NOTE

The welding machine may only be tested by competent, capable personsl.
A capable person is one who, because of his training, knowledge and experience, is able to recognise the dangers that can occur while testing welding power sources as well as possible subsequent damage and who is able to implement the required safety procedures.

For further information, please see the accompanying supplementary sheets "Machine and Company Data, Maintenance and Testing, Warranty"!

A periodic test according to IEC 60974-4 "Periodic inspection and test" has to be carried out. In addition to the regulations on testing given here, the relevant local laws and regulations must also be observed.

6.3 Maintenance work

DANGER

Do not carry out any unauthorised repairs or modifications!
To avoid injury and equipment damage, the unit must only be repaired or modified by specialist, skilled persons!
The warranty becomes null and void in the event of unauthorised interference.

- Appoint only skilled persons for repair work (trained service personnel)!

Repair and maintenance work may only be performed by qualified authorised personnel; otherwise the right to claim under warranty is void. In all service matters, always consult the dealer who supplied the machine. Return deliveries of defective equipment subject to warranty may only be made through your dealer. When replacing parts, use only original spare parts. When ordering spare parts, please quote the machine type, serial number and item number of the machine, as well as the type designation and item number of the spare part.

6.4 Disposing of equipment

NOTE

Proper disposal!
The machine contains valuable raw materials, which should be recycled, and electronic components, which must be disposed of.

- Do not dispose of in household waste!
- Observe the local regulations regarding disposal!

6.4.1 Manufacturer's declaration to the end user

- According to European provisions (guideline 2002/96/EG of the European Parliament and the Council of January, 27th 2003), used electric and electronic equipment may no longer be placed in unsorted municipal waste. It must be collected separately. The symbol depicting a waste container on wheels indicates that the equipment must be collected separately.
  This machine is to be placed for disposal or recycling in the waste separation systems provided for this purpose.
- According to German law (law governing the distribution, taking back and environmentally correct disposal of electric and electronic equipment (ElektroG) from 16.03.2005), used machines are to be placed in a collection system separate from unsorted municipal waste. The public waste management utilities (communities) have created collection points at which used equipment from private households can be disposed of free of charge.
- Information about giving back used equipment or about collections can be obtained from the respective municipal administration office.
- EWM participates in an approved waste disposal and recycling system and is registered in the Used Electrical Equipment Register (EAR) under number WEEE DE 57686922.
- In addition to this, returns are also possible throughout Europe via EWM sales partners.

6.5 Meeting the requirements of RoHS

We, EWM HIGHTEC Welding GmbH Mündersbach, hereby confirm that all products supplied by us which are affected by the RoHS Directive, meet the requirements of the RoHS (Directive 2002/95/EC).

7 Rectifying faults

All products are subject to rigorous production checks and final checks. If, despite this, something fails to work at any time, please check the product using the following flowchart. If none of the fault rectification procedures described leads to the correct functioning of the product, please inform your authorised dealer.

7.1 Customer checklist

Legend

: Fault/Cause

: Remedy

NOTE

The correct machine equipment for the material and process gas in use is a fundamental requirement for perfect operation!

Wire feed problems

- Contact nozzle blocked
  - Clean, spray with separating agent and replace if necessary
- Setting the spool brake (see "Setting the spool brake" chapter)
  - Check settings and correct if necessary
- Setting pressure units (see "Inching wire electrodes" chapter)
  - Check settings and correct if necessary
- Worn wire rolls
  - Check and replace if necessary
- Wire feed motor without supply voltage (automatic cutout triggered by overloading)
  - Reset triggered fuse (rear of the power source) by pressing the key button
- Kinked hose packages
  - Extend and lay out the torch hose package
- Wire guide core or spiral is dirty or worn
  - Clean core or spiral; replace kinked or worn cores

Functional errors

- Machine control without displaying the signal lights after switching on
  - Phase failure > check mains connection (fuses)
- No welding performance
  - Phase failure > check mains connection (fuses)
- Various parameters cannot be set
  - Entry level is blocked, disable access lock (see chapter entitled "Lock welding parameters against unauthorised access")
- Connection problems
  - Make control lead connections and check that they are fitted correctly.
- Loose welding current connections
  - Tighten power connections on the torch and/or on the workpiece
  - Tighten contact tip/collet correctly

7.2 Error messages (power source)

All products are subject to rigorous production checks and final checks. If, despite this, something fails to work at any time, please check the product using the following flowchart. If none of the fault rectification procedures described leads to the correct functioning of the product, please inform your authorised dealer.

NOTE

☞ **A welding machine error is indicated by an error code being displayed (see table) on the display on the machine control.**
In the event of a machine error, the power unit is shut down.

- Document machine errors and inform service staff as necessary.
- If multiple errors occur, these are displayed in succession.

Error	Category		Possible cause	Remedy
	a)	b)		
Err 1	-	x	Mains overvoltage	Check the mains voltages and compare with the connection voltages of the welding machine (see Technical Data, chapter 1)
Err 2	-	x	Mains undervoltage	
Err 3	x	-	Welding machine, excess temperature	Allow the machine to cool down (mains switch to "1")
Err 4	-	x	Low coolant level	Top up the coolant Leak in the coolant circuit > rectify the leak and top up the coolant Coolant pump is not working > check excess current release on air cooling unit
Err 5	-	x	Error WF unit, WF motor fault, Speedometer error	Check wire feed unit check wire-feeding no signal from speedometer, > inform Service
Err 7	-	x	Secondary overvoltage	Inverter error > inform Service
Err 8	-	x	Earth fault between welding wire and earth line	Separate the connection between the welding wire and casing or an earthed object
Err 9	x	-	Fast shut-down triggered by BUSINT X10 or RINT X12	Rectify error on robot
Err 10	-	x	Arc interruption triggered by BUSINT X10 or RINT X12	Check wire feed
Err 11	-	x	Ignition fault after 5 s triggered by BUSINT X10 or RINT X12	Check wire feed

Category legend for error reset

a) The error message will disappear once the error has been rectified.

b) Errors can only be reset by switching the machine off and back on again.

8 Technical data

NOTE

☞ **Performance specifications and guarantee only in connection with original spare and replacement parts!**

8.1 Taurus 335 Basic S

Setting range: Welding current/voltage	
MMA	5 A-330 A
MIG/MAG	5 A-330 A
Duty cycle at 40 °C ambient temperature	
35% DC	330 A
60% DC	250 A
100% DC	210 A
Duty cycle at 25 °C ambient temperature	
40% DC	330 A
60% DC	280 A
100% DC	240 A
Load alternation	10 min. (60% DC ≙ 6 min. welding, 4 min. pause)
Open circuit voltage	79 V
Mains voltage (tolerances)	3 x 400 V (-25% to +20%)
Frequency	50/60 Hz
Mains fuse (safety fuse, slow-blow)	3 x 16 A
Mains connection lead	H07RN-F4G2.5
Maximum connected load	
MIG/MAG	12.7 kVA
MMA	13.8 kVA
Recommended generator rating	18.7 kVA
Cos φ	0.99%
Insulation class/protection classification	F/IP 23
Ambient temperature	-20 °C to +40 °C
Machine cooling	Fan
Workpiece lead	50 mm^2
Dimensions L/W/H [mm]	625 x 300 x 480
Weight	35,5 kg
Wire feed speed	0.5 m/min to 24 m/min
Factory-fit roller equipment	1.0 mm + 1.2 mm (for steel wire)
Drive	4-roller (37 mm)
EMC class	A
Constructed to standards	IEC 60974-1, -5, -10 S/CE

9 Accessories

NOTE

Performance-dependent accessories like torches, workpiece leads, electrode holders or intermediate hose packages are available from your authorised dealer.

9.1 General accessories

Type	Designation	Item no.
Trolly 55-2	Transport vehicle	090-008628-00000
cool 50	Cooling module	090-008598-00502
AK300	Adapter for K300 basket coil	094-001803-00001
DM1 32L/MIN	Manometer pressure regulator	094-000009-00000
G1 2M G1/4 R 2M	Gas hose	094-000010-00001
GS16L G1/4" SW 17	Pilot static tube	094-000914-00000
GS25L G1/4" SW 17	Pilot static tube	094-001100-00000
5POLE/CEE/16A/M	Machine plug	094-000712-00000

9.2 Remote control / connection cable

Type	Designation	Item no.
R11 19POL	Remote control	090-008601-00502
RG11 19POL 5M	Remote control	090-008107-00000
RA5 19POL 5M	Remote control e.g. connection cable	092-001470-00005
RA10 19POL 10M	Remote control e.g. connection cable	092-001470-00010
RA20 19POL 20M	Remote control e.g. connection cable	092-001470-00020

9.3 Computer communication

Type	Designation	Item no.
PC300.NET	PC300.Net welding parameter software set incl. cable and SECINT X10 USB interface	090-008265-00000
CD-ROM PC300.NET	PC300.Net Update on CD-ROM	092-008172-00001
PCV10-L 10M 9POL	Cable between PC/interface	094-001206-00002

9.4 Wire feed rollers

9.4.1 Wire feed rollers for steel wire

Type	Designation	Item no.
FE 2DR4R 0,6+0,8	Drive rollers, 37 mm, steel	092-000839-00000
FE 2DR4R 0,8+1,0	Drive rollers, 37 mm, steel	092-000840-00000
FE 2DR4R 0,9+1,2	Drive rollers, 37 mm, steel	092-000841-00000
FE 2DR4R 1,0+1,2	Drive rollers, 37 mm, steel	092-000842-00000
FE 2DR4R 1,2+1,6	Drive rollers, 37 mm, steel	092-000843-00000
FE/AL 2GR4R	Counterpressure rollers, smooth, 37mm	092-000844-00000

9.4.2 Wire feed rollers for aluminium wire

Type	Designation	Item no.
AL 4ZR4R 0,8+1,0	Twin rollers, 37 mm, for aluminium	092-000869-00000
AL 4ZR4R 1,0+1,2	Twin rollers, 37 mm, for aluminium	092-000848-00000
AL 4ZR4R 1,2+1,6	Twin rollers, 37 mm, for aluminium	092-000849-00000
AL 4ZR4R 2,4+3,2	Twin rollers, 37 mm, for aluminium	092-000870-00000

9.4.3 Wire feed rollers for cored wire

Type	Designation	Item no.
ROE 2DR4R 0,8/0,9+0,8/0,9	Drive rollers, 37 mm, cored wire	092-000834-00000
ROE 2DR4R 1,0/1,2+1,4/1,6	Drive rollers, 37 mm, cored wire	092-000835-00000
ROE 2DR4R 1,4/1,6+2,0/2,4	Drive rollers, 37 mm, cored wire	092-000836-00000
ROE 2DR4R 2,8+3,2	Drive rollers, 37 mm, cored wire	092-000837-00000
ROE 2GR4R	Counterpressure rollers, knurled, 37mm	092-000838-00000

9.4.4 Conversion sets

Type	Designation	Item no.
URUE VERZ>UNVERZ FE/AL 4R	Conversion kit, 37mm, 4-roller drive on non-toothed rollers (steel/aluminium)	092-000845-00000
URUE AL 4ZR4R 0,8+1,0	Conversion kit, 37mm, 4-roller drive for aluminium	092-000867-00000
URUE AL 4ZR4R 1,0+1,2	Conversion kit, 37mm, 4-roller drive for aluminium	092-000846-00000
URUE AL 4ZR4R 1,2+1,6	Conversion kit, 37mm, 4-roller drive for aluminium	092-000847-00000
URUE AL 4ZR4R 2,4+3,2	Conversion kit, 37mm, 4-roller drive for aluminium	092-000868-00000
URUE ROE 2DR4R 0,8/0,9+0,8/0,9	Conversion kit, 37mm, 4-roller drive for cored wire	092-000830-00000
URUE ROE 2DR4R 1,0/1,2+1,4/1,6	Conversion kit, 37mm, 4-roller drive for cored wire	092-000831-00000
URUE ROE 2DR4R 1,4/1,6+2,0/2,4	Conversion kit, 37mm, 4-roller drive for cored wire	092-000832-00000
URUE ROE 2DR4R 2,8+3,2	Conversion kit, 37mm, 4-roller drive for cored wire	092-000833-00000

9.5 Options

Type	Designation	Item no.
ON MF XX5	Dirt filter	092-002662-00000
ON AIF XX5	Interface for mechanised welding	092-001237-00000
ON CS 55	Crane suspension, retrofit option	092-002549-00000

10 Appendix A

10.1 Overview of EWM branches

www.ewm-group.com

Headquarters

EWM HIGHTEC WELDING GmbH
Dr. Günter-Henle-Straße 8
56271 Mündersbach · Germany
Tel: +49 2680 181-0 · Fax: -244
www.ewm-group.com · info@ewm-group.com

Technology centre

EWM HIGHTEC WELDING GmbH
Forststr. 7-13
56271 Mündersbach · Germany
Tel: +49 2680 181-0 · Fax: -244
www.ewm-group.com · info@ewm-group.com

Production, Sales and Service

EWM HIGHTEC WELDING GmbH
Dr. Günter-Henle-Straße 8
56271 Mündersbach · Germany · Tel: +49 2680 181-0 · Fax: -244
www.ewm-group.com · info@ewm-group.com

EWM HIGHTEC WELDING (Kunshan) Ltd.
10 Yuanshan Road, Kunshan · New & High-tech Industry Development Zone
Kunshan · Jiangsu · 215300 · People´s Republic of China
Tel: +86 512 57867-188 · Fax: -182
www.ewm-group.com/cn · info.cn@ewm-group.com

EWM HIGHTEC WELDING AUTOMATION GmbH
Boxbachweg 4
08606 Oelsnitz/V. · Germany · Tel: +49 37421 20-300 · Fax: -318
www.ewm-group.com/automation · automation@ewm-group.com

EWM HIGHTEC WELDING s.r.o.
Tr. 9. kvetna 718 / 31
407 53 Jiříkov · Czech Republic · Tel: +420 412 358-551 · Fax: -504
www.ewm-group.com/cz · info.cz@ewm-group.com

Sales and Service Germany

EWM HIGHTEC WELDING GmbH / Niederlassung Seesen
Lindenstraße 1a
38723 Seesen-Rhüden · Germany · Tel: +49 5384 90798-0 · Fax: -20
www.ewm-group.com/handel · nl-seesen@ewm-group.com

EWM Schweißtechnik-Handels-GmbH
In der Florinskaul 14-16
56218 Mülheim-Kärlich · Germany · Tel: +49 261 988898-0 · Fax: -20
www.ewm-group.com/handel · nl-muelheim@ewm-group.com

EWM Schweißtechnik-Handels-GmbH
Sachsstraße 28
50259 Pulheim · Germany · Tel: +49 2234 697-047 · Fax: -048
www.ewm-group.com/handel · nl-koeln@ewm-group.com

EWM Schweißtechnik Handels GmbH
Heinkelstraße 8
89231 Neu-Ulm · Germany · Tel: +49 731 7047939-0 · Fax: -15
www.ewm-group.com/handel · nl-ulm@ewm-group.com

EWM HIGHTEC WELDING AUTOMATION GmbH
Steinfeldstrasse 15
90425 Nürnberg · Germany · Tel: +49 911 3841-727 · Fax: -728
www.ewm-group.com/automation
automation-nl-nuernberg@ewm-group.com

Sales and Service International

EWM HIGHTEC WELDING GmbH
Fichtenweg 1
4810 Gmunden · Austria · Tel: +43 7612 778 02-0 · Fax: -20
www.ewm-group.com/at · info.at@ewm-group.com

EWM HIGHTEC WELDING UK Ltd.
Unit 2B Coopies Way · Coopies Lane Industrial Estate
Morpeth · Northumberland · NE61 6JN · Great Britain
Tel: +44 1670 505875 · Fax: -514305
www.ewm-group.com/uk · info.uk@ewm-group.com

EWM HIGHTEC WELDING (Kunshan) Ltd.
10 Yuanshan Road, Kunshan · New & High-tech Industry Development Zone
Kunshan · Jiangsu · 215300 · People´s Republic of China
Tel: +86 512 57867-188 · Fax: -182
www.ewm-group.com/cn · info.cn@ewm-group.com

EWM HIGHTEC WELDING Sales s.r.o. / Prodejní a poradenské centrum
Tyršova 2106
256 01 Benešov u Prahy · Czech Republic
Tel: +420 317 729-517 · Fax: -712
www.ewm-group.com/cz · sales.cz@ewm-group.com

EWM HIGHTEC WELDING FZCO / Regional Office Middle East
LOB 21 G 16 · P.O. Box 262851
Jebel Ali Free Zone · Dubai, UAE · United Arab Emirates
Tel: +971 48870-322 · Fax: -323
www.ewm-group.com/me · info.me@ewm-group.com