Operating instructions

GB

Machines for MIG/MAG welding

Saturn 256 DG

Observe additional system documents!

099-005167-EW501 29.06.2010

General instructions

CAUTION

Read the operating instructions!
The operating instructions provide an introduction to the safe use of the products.

- Read the operating instructions for all system components!
- Observe accident prevention regulations!
- Observe all local regulations!
- Confirm with a signature where appropriate.

NOTE

In the event of queries on installation, commissioning, operation or special conditions at the installation site, or on usage, please contact your sales partner or our customer service department on +49 2680 181-0.
A list of authorised sales partners can be found at www.ewm-group.com.

Liability relating to the operation of this equipment is restricted solely to the function of the equipment. No other form of liability, regardless of type, shall be accepted. This exclusion of liability shall be deemed accepted by the user on commissioning the equipment.

The manufacturer is unable to monitor whether or not these instructions or the conditions and methods are observed during installation, operation, usage and maintenance of the equipment.
An incorrectly performed installation can result in material damage and injure persons as a result. For this reason, we do not accept any responsibility or liability for losses, damages or costs arising from incorrect installation, improper operation or incorrect usage and maintenance or any actions connected to this in any way.

1 Inhaltsverzeichnis

2 Safety instructions

2.1 Notes on the use of these operating instructions

DANGER

Working or operating procedures which must be closely observed to prevent imminent serious and even fatal injuries.

- Safety notes include the "DANGER" keyword in the heading with a general warning symbol.
- The hazard is also highlighted using a symbol on the edge of the page.

WARNING

Working or operating procedures which must be closely observed to prevent serious and even fatal injuries.

- Safety notes include the "WARNING" keyword in the heading with a general warning symbol.
- The hazard is also highlighted using a symbol in the page margin.

CAUTION

Working or operating procedures which must be closely observed to prevent possible minor personal injury.

- The safety information includes the "CAUTION" keyword in its heading with a general warning symbol.
- The risk is explained using a symbol on the edge of the page.

CAUTION

Working and operating procedures which must be followed precisely to avoid damaging or destroying the product.

- The safety information includes the "CAUTION" keyword in its heading without a general warning symbol.
- The hazard is explained using a symbol at the edge of the page.

NOTE

Special technical points which users must observe.

- Notes include the "NOTE" keyword in the heading without a general warning symbol.

Instructions and lists detailing step-by-step actions for given situations can be recognised via bullet points, e.g.:

- Insert the welding current lead socket into the relevant socket and lock.

2.2 Explanation of icons

Symbol	Description
	**Press**
	**Do not press**
	**Turn**
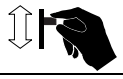	**Switch**
	**Switch off machine**
	**Switch on machine**
	**ENTER (enter the menu)**
	**NAVIGATION (Navigating in the menu)**
	**EXIT (Exit the menu)**
	**Time display (example: wait 4s/press)**
	**Interruption in the menu display (other setting options possible)**
	**Tool not required/do not use**
	**Tool required/use**
	**Wire feed unit**
	**Power source (Welding machine)**

2.3 General

DANGER

Electric shock!
Welding machines use high voltages which can result in potentially fatal electric shocks and burns on contact. Even low voltages can cause you to get a shock and lead to accidents.

- Do not touch any live parts in or on the machine!
- Connection cables and leads must be free of faults!
- Switching off alone is not sufficient!
- Place welding torch and stick electrode holder on an insulated surface!
- The unit should only be opened by specialist staff after the mains plug has been unplugged!
- Only wear dry protective clothing!
- Wait for 4 minutes until the capacitors have discharged!

Electromagnetic fields!
The power source may cause electrical or electromagnetic fields to be produced which could affect the correct functioning of electronic equipment such as IT or CNC devices, telecommunication lines, power cables, signal lines and pacemakers.

- Observe the maintenance instructions! (see Maintenance and Testing chapter)
- Unwind welding lines completely!
- Shield devices or equipment sensitive to radiation accordingly!
- The correct functioning of pacemakers may be affected (obtain advice from a doctor if necessary).

Do not carry out any unauthorised repairs or modifications!
To avoid injury and equipment damage, the unit must only be repaired or modified by specialist, skilled persons!
The warranty becomes null and void in the event of unauthorised interference.

- Appoint only skilled persons for repair work (trained service personnel)!

WARNING

Risk of accidents if these safety instructions are not observed!
Non-observance of these safety instructions is potentially fatal!
- Carefully read the safety information in this manual!
- Observe the accident prevention regulations in your country.
- Inform persons in the working area that they must observe the regulations!

Risk of injury due to radiation or heat!
Arc radiation results in injury to skin and eyes.
Contact with hot workpieces and sparks results in burns.
- Use welding shield or welding helmet with the appropriate safety level (depending on the application)!
- Wear dry protective clothing (e.g. welding shield, gloves, etc.) according to the relevant regulations in the country in question!
- Protect persons not involved in the work against arc beams and the risk of glare using safety curtains!

Explosion risk!
Apparently harmless substances in closed containers may generate excessive pressure when heated.
- Move containers with inflammable or explosive liquids away from the working area!
- Never heat explosive liquids, dusts or gases by welding or cutting!

Smoke and gases!
Smoke and gases can lead to breathing difficulties and poisoning. In addition, solvent vapour (chlorinated hydrocarbon) may be converted into poisonous phosgene due to the ultraviolet radiation of the arc!
- Ensure that there is sufficient fresh air!
- Keep solvent vapour away from the arc beam field!
- Wear suitable breathing apparatus if appropriate!

Fire hazard!
Flames may arise as a result of the high temperatures, stray sparks, glowing-hot parts and hot slag produced during the welding process.
Stray welding currents can also result in flames forming!
- Check for fire hazards in the working area!
- Do not carry any easily flammable objects such as matches or lighters.
- Keep appropriate fire extinguishing equipment to hand in the working area!
- Thoroughly remove any residue of flammable substances from the workpiece before starting welding.
- Only continue work on welded workpieces once they have cooled down.
  Do not allow to come into contact with flammable material!
- Connect welding leads correctly!

CAUTION

Noise exposure!
Noise exceeding 70 dBA can cause permanent hearing damage!
- Wear suitable ear protection!
- Persons located within the working area must wear suitable ear protection!

CAUTION

Obligations of the operator!
The respective national directives and laws must be observed for operation of the machine!

- National implementation of the framework directive (89/391/EWG), as well as the associated individual directives.
- In particular, directive (89/655/EWG), on the minimum regulations for safety and health protection when staff members use equipment during work.
- The regulations regarding work safety and accident prevention for the respective country.
- Setting up and operating the machine according to IEC 60974-9.
- Check at regular intervals that users are working in a safety-conscious way.
- Regular checks of the machine according to IEC 60974-4.

Damage due to the use of non-genuine parts!
The manufacturer's warranty becomes void if non-genuine parts are used!

- Only use system components and options (power sources, welding torches, electrode holders, remote controls, spare parts and replacement parts, etc.) from our range of products!
- Only insert and lock accessory components into the relevant connection socket when the machine is switched off.

Electromagnetic interference!
The machines are intended to be used in industrial areas, according to IEC 60974-10. If they are used in residential areas, for example, problems may occur with ensuring electromagnetic compatibility.

- Check whether interference is caused to other machines!

2.4 Transport and installation

WARNING

Incorrect handling of shielding gas cylinders!
Incorrect handling of shielding gas cylinders can result in serious and even fatal injury.

- Observe the instructions from the gas manufacturer and in any relevant regulations concerning the use of compressed air!
- Place shielding gas cylinders in the holders provided for them and secure with fixing devices.
- Avoid heating the shielding gas cylinder!

CAUTION

Risk of tipping!
There is a risk of the machine tipping over and injuring persons or being damaged itself during movement and set up. Tilt resistance is guaranteed up to an angle of 10° (according to IEC 60974-1, -3, -10).

- Set up and transport the machine on level, solid ground.
- Secure add-on parts using suitable equipment.

Damage due to supply lines not being disconnected!
During transport, supply lines which have not been disconnected (mains supply leads, control leads, etc.) may cause hazards such as connected equipment tipping over and injuring persons!

- Disconnect supply lines!

CAUTION

Equipment damage when not operated in an upright position!
The units are designed for operation in an upright position!
Operation in non-permissible positions can cause equipment damage.

- Only transport and operate in an upright position!

2.5 Ambient conditions

CAUTION

Installation site!
The machine must not be operated in the open air and must only be set up and operated on a suitable, stable and level base!

- The operator must ensure that the ground is non-slip and level, and provide sufficient lighting for the place of work.
- Safe operation of the machine must be guaranteed at all times.

CAUTION

Equipment damage due to dirt accumulation!
Unusually high quantities of dust, acid, corrosive gases or substances may damage the equipment.

- Avoid high volumes of smoke, vapour, oil vapour and grinding dust!
- Avoid ambient air containing salt (sea air)!

Non-permissible ambient conditions!
Insufficient ventilation results in a reduction in performance and equipment damage.

- Observe the ambient conditions!
- Keep the cooling air inlet and outlet clear!
- Observe the minimum distance of 0.5 m from obstacles!

2.5.1 In operation

Temperature range of the ambient air:

- -20 °C to +40 °C

Relative air humidity:

- Up to 50% at 40 °C
- Up to 90% at 20 °C

2.5.2 Transport and storage

Storage in an enclosed space, temperature range of the ambient air:

- -25 °C to +55 °C

Relative air humidity

- Up to 90% at 20 °C

3 Intended use

This machine has been manufactured according to the latest developments in technology and current regulations and standards. It must only be operated in line with the instructions on correct usage.

WARNING

Hazards due to improper usage!
Hazards may arise for persons, animals and material objects if the equipment is not used correctly. No liability is accepted for any damages arising from improper usage!

- The equipment must only be used in line with proper usage and by trained or expert staff!
- Do not modify or convert the equipment improperly!

3.1 Applications

3.1.1 MIG/MAG standard welding

Metal arc welding using a wire electrode whereby gas from an external source surrounds the arc and the molten pool to protect them from the atmosphere.

3.2 Use and operation solely with the following machines

- Saturn drive 41L M2.41
- Saturn drive 41L M1.02

3.3 Documents which also apply

3.3.1 Warranty

NOTE

For further information, please see the accompanying supplementary sheets "Machine and Company Data, Maintenance and Testing, Warranty"!

3.3.2 Declaration of Conformity

The designated machine conforms to EC Directives and standards in terms of its design and construction:

- EC Low Voltage Directive (2006/95/EC),
- EC EMC Directive (2004/108/EC),

This declaration shall become null and void in the event of unauthorised modifications, improperly conducted repairs, non-observance of the deadlines for the repetition test and / or non-permitted conversion work not specifically authorised by the manufacturer.
The original copy of the declaration of conformity is enclosed with the unit.

3.3.3 Welding in environments with increased electrical hazards

In compliance with IEC / DIN EN 60974, VDE 0544 the machines can be used in environments with an increased electrical hazard.

3.3.4 Service documents (spare parts and circuit diagrams)

DANGER

Do not carry out any unauthorised repairs or modifications!
To avoid injury and equipment damage, the unit must only be repaired or modified by specialist, skilled persons!
The warranty becomes null and void in the event of unauthorised interference.

- Appoint only skilled persons for repair work (trained service personnel)!

Original copies of the circuit diagrams are enclosed with the unit.
Spare parts can be obtained from the relevant authorised dealer.

4 Machine description – quick overview

4.1 Front view

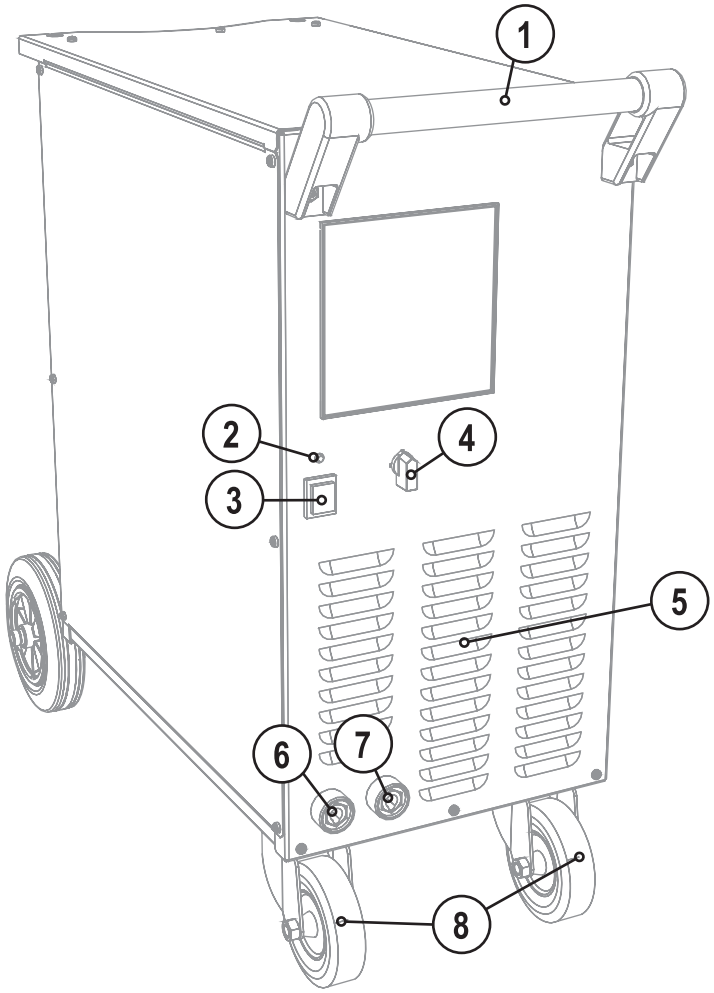

Figure 4-1

Item	Symbol	Description
1		**Carrying handle**
2		**Signal light, Functional error** On when excess temperature detected
3		**Main switch, machine on/off**
4		**Welding voltage step switch** To set the welding voltage
5		**Cooling air inlet**
6		**Connection socket, workpiece lead** "Hard" choke tapping
7		**Connection socket, workpiece lead** Choke tapping "soft"
8		**Conveyor rolls, guide castors**

4.2 Rear view

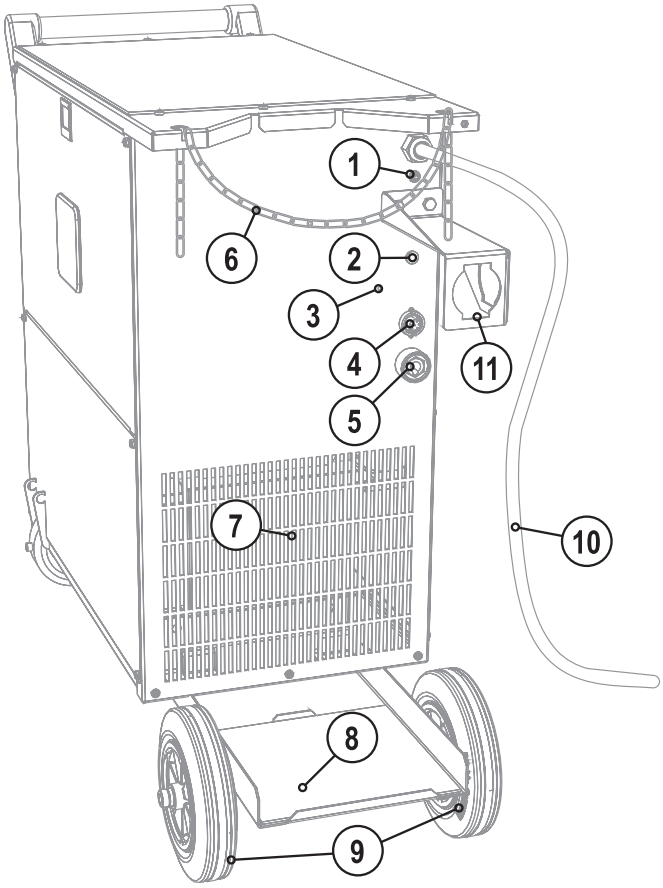

Figure 4-2

Item	Symbol	Description
1	42V/4A	**Key button, automatic cutout** Wire feed motor supply voltage fuse press to reset a triggered fuse
2	M 2.41 Pol.	**Changeover switch for welding current polarity (welding voltage display)** Depending on the polarity selected on the welding torch (standard MIG or cored wire welding) it is necessary to set this status on the machine to ensure the welding voltage is displayed correctly. Position A: Standard MIG welding (factory setting) Position B: Cored wire welding (self-shielding)
3		**Earth cable connecting (PE)** Connection of green-yellow earth cable from the intermediate tube package
4		**7-pole connection socket** Wire feed unit control lead
5		**Connector plug, welding current "+"** Welding current connection on wire feed unit
6		**Securing elements for shielding gas cylinder (strap/chain)**
7		**Cooling air outlet**
8		**Bracket for shielding gas cylinder**
9		**Conveyor rolls, fixed castors**
10		**Mains connection cable**
11		**Intermediate tube package strain relief**

5 Design and function

NOTE

Observe documentation of other system components when connecting!

5.1 General

DANGER

Risk of injury from electric shock!
Contact with live parts, e.g. welding current sockets, is potentially fatal!

- Follow safety instructions on the opening pages of the operating instructions.
- Commissioning may only be carried out by persons who have the relevant expertise of working with arc welding machines!
- Connection and welding leads (e.g. electrode holder, welding torch, workpiece lead, interfaces) may only be connected when the machine is switched off!

CAUTION

Risk of burns on the welding current connection!
If the welding current connections are not locked, connections and leads heat up and can cause burns, if touched!

- Check the welding current connections every day and lock by turning in clockwise direction, if necessary.

Risk of injury due to moving parts!
The wire feed units are equipped with moving parts, which can trap hands, hair, clothing or tools and thus injure persons!

- Do not reach into rotating or moving parts or drive components!
- Keep casing covers closed during operation!

Risk of injury due to welding wire escaping in an unpredictable manner!
Welding wire can be conveyed at very high speeds and, if conveyed incorrectly, may escape in an uncontrolled manner and injure persons!

- Before mains connection, set up the complete wire guide system from the wire spool to the welding torch!
- Remove the counter pressure rollers from the wire feed unit if no welding torch is fitted!
- Check wire guide at regular intervals!
- Keep all casing covers closed during operation!

Risk from electrical current!
If welding is carried out alternately using different methods and if a welding torch and an electrode holder remain connected to the machine, the open-circuit/welding voltage is applied simultaneously on all cables.

- The torch and the electrode holder should therefore always be placed on an insulated surface before starting work and during breaks.

CAUTION

Damage due to incorrect connection!
Accessory components and the power source itself can be damaged by incorrect connection!

- Only insert and lock accessory components into the relevant connection socket when the machine is switched off.
- Comprehensive descriptions can be found in the operating instructions for the relevant accessory components.
- Accessory components are detected automatically after the power source is switched on.

Using protective dust caps!
Protective dust caps protect the connection sockets and therefore the machine against dirt and damage.

- The protective dust cap must be fitted if there is no accessory component being operated on that connection.
- The cap must be replaced if faulty or if lost!

5.2 Installation

CAUTION

Installation site!
The machine must not be operated in the open air and must only be set up and operated on a suitable, stable and level base!

- The operator must ensure that the ground is non-slip and level, and provide sufficient lighting for the place of work.
- Safe operation of the machine must be guaranteed at all times.

5.3 Machine cooling

To obtain an optimal duty cycle from the power components, the following precautions should be observed:

- Ensure that the working area is adequately ventilated.
- Do not obstruct the air inlets and outlets of the machine.
- Do not allow metal parts, dust or other objects to get into the machine.

5.4 Workpiece lead, general

CAUTION

Risk of burns due to incorrect connection of the workpiece lead!
Paint, rust and dirt on the connection restrict the power flow and may lead to stray welding currents.
Stray welding currents may cause fires and injuries!

- Clean the connections!
- Fix the workpiece lead securely!
- Do not use structural parts of the workpiece as a return lead for the welding current!
- Take care to ensure faultless power connections!

5.5 Mains connection

DANGER

Hazard caused by improper mains connection!
An improper mains connection can cause injuries or damage property!

- Only use machine with a plug socket that has a correctly fitted protective conductor.
- If a mains plug must be fitted, this may only be carried out by an electrician in accordance with the relevant national provisions or regulations (any phase sequence for three-phase machines)!
- Mains plug, socket and lead must be checked regularly by an electrician!

5.5.1 Mains configuration

NOTE

The machine may be connected and operated on all TN or TT networks with a neutral conductor and a protective conductor.

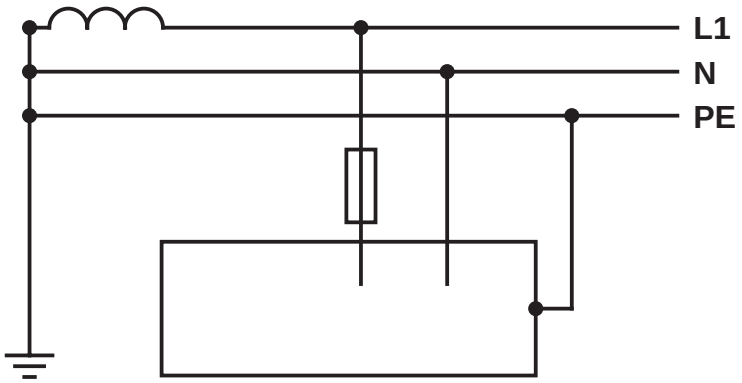

Figure 5-1

Legend

Item	Designation	Colour code
L1	Outer conductor	brown
N	Neutral conductor	blue
PE	Protective conductor	green-yellow

CAUTION

Operating voltage - mains voltage!
The operating voltage shown on the rating plate must be consistent with the mains voltage, in order to avoid damage to the machine!

- For mains fuse protection, please refer to the “Technical data” chapter!

- Insert mains plug of the switched-off machine into the appropriate socket.

5.5.2 Intermediate tube package connection

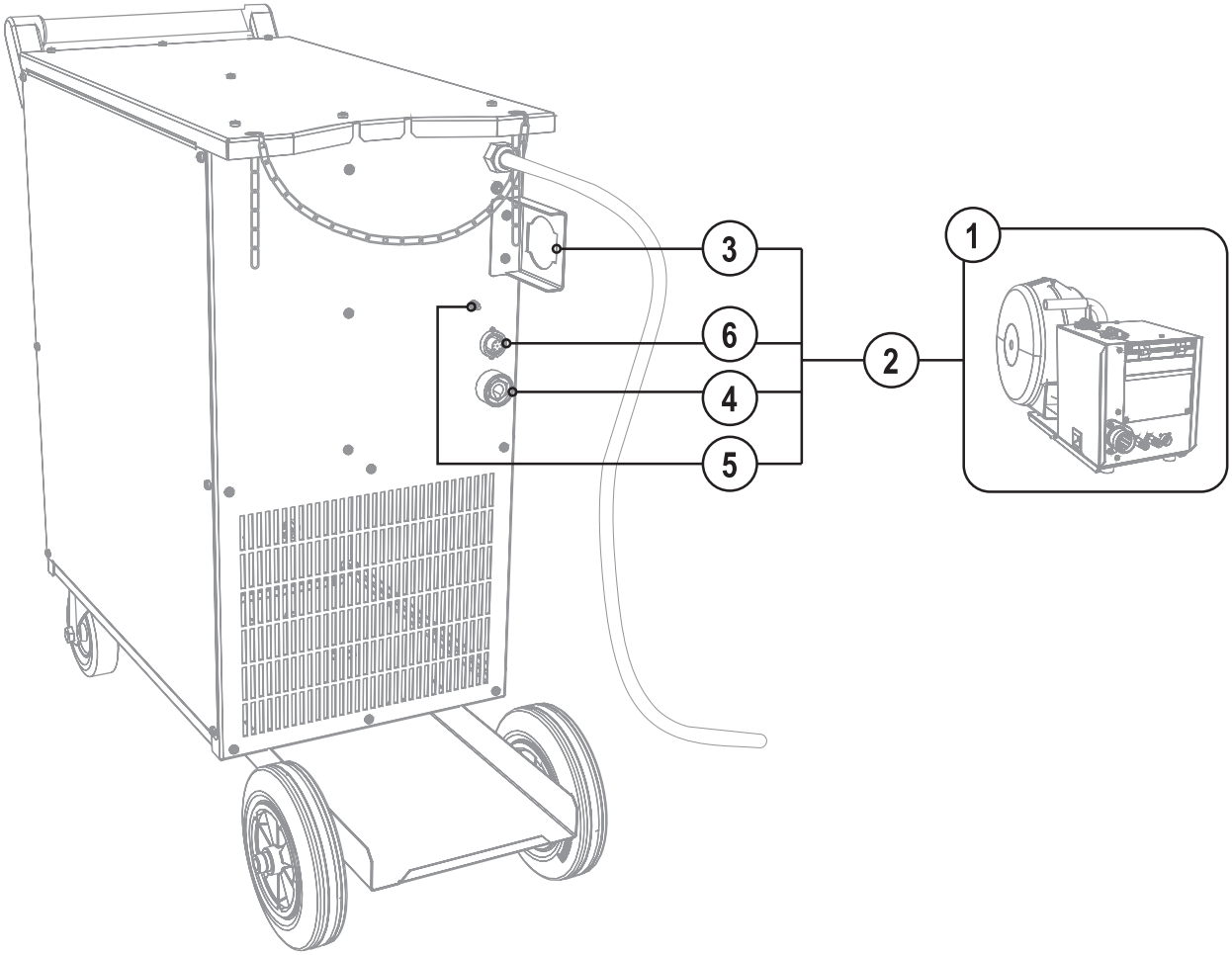

Figure 5-2

Item	Symbol	Description
1		**Wire feed unit**
2		**Intermediate tube package**
3		**Intermediate tube package strain relief**
4		**Connector plug, welding current "+"** Welding current connection on wire feed unit
5		**Earth cable connecting (PE)** Connection of green-yellow earth cable from the intermediate tube package
6		**7-pole connection socket** Wire feed unit control lead

- Insert the end of the tube package through the strain relief of the tube package and lock by turning to the right.
- Insert the plug on the welding current lead into the welding current connection socket "+" and lock.
- Screw the eyelet of the earth lead on to the connecting nipple of the earth lead.
- Insert cable plug on the control lead into the 7-pole connection socket and secure with crown nut (the plug can only be inserted into the connection socket in one position).

5.6 Shielding gas supply

5.6.1 Connecting the shielding gas supply

DANGER

Risk of injury caused by shielding gas cylinders toppling over!
Shielding gas cylinders may topple over and cause serious injury if not adequately secured!

- Secure shielding gas cylinders with the securing device (chain/strap) supplied as standard with the machine!
- Securing devices must fit tightly around the cylinder!
- The strap or chain must be fitted to the upper half of the shielding gas cylinders!
- Cylinders may not be secured at the valve!

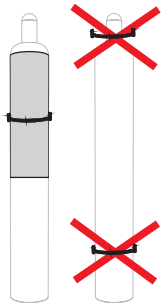

WARNING

Incorrect handling of shielding gas cylinders!
Incorrect handling of shielding gas cylinders can result in serious and even fatal injury.

- Observe the instructions from the gas manufacturer and in any relevant regulations concerning the use of compressed air!
- Place shielding gas cylinders in the holders provided for them and secure with fixing devices.
- Avoid heating the shielding gas cylinder!

CAUTION

Faults in the shielding gas supply.
An unhindered shielding gas supply from the shielding gas cylinder to the welding torch is a fundamental requirement for optimum welding results. In addition, a blocked shielding gas supply may result in the welding torch being destroyed.

- Always re-fit the yellow protective cap when not using the shielding gas connection.
- All shielding gas connections must be gas tight.

NOTE

Before connecting the pressure reducer to the gas cylinder, open the cylinder valve briefly to expel any dirt.

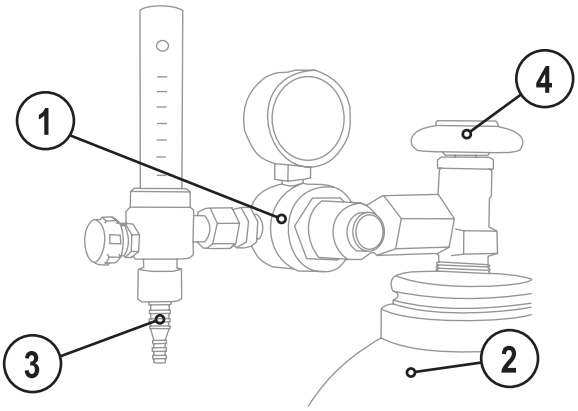

Figure 5-3

Item	Symbol	Description
1		**Pressure reducer**
2		**Shielding gas cylinder**
3		**Output side of the pressure reducer**
4		**Cylinder valve**

- Place the shielding gas cylinder into the relevant cylinder bracket.
- Secure the shielding gas cylinder using a securing chain.
- Tighten the pressure reducer screw connection on the gas bottle valve to be gas-tight.

5.7 Connection for workpiece lead

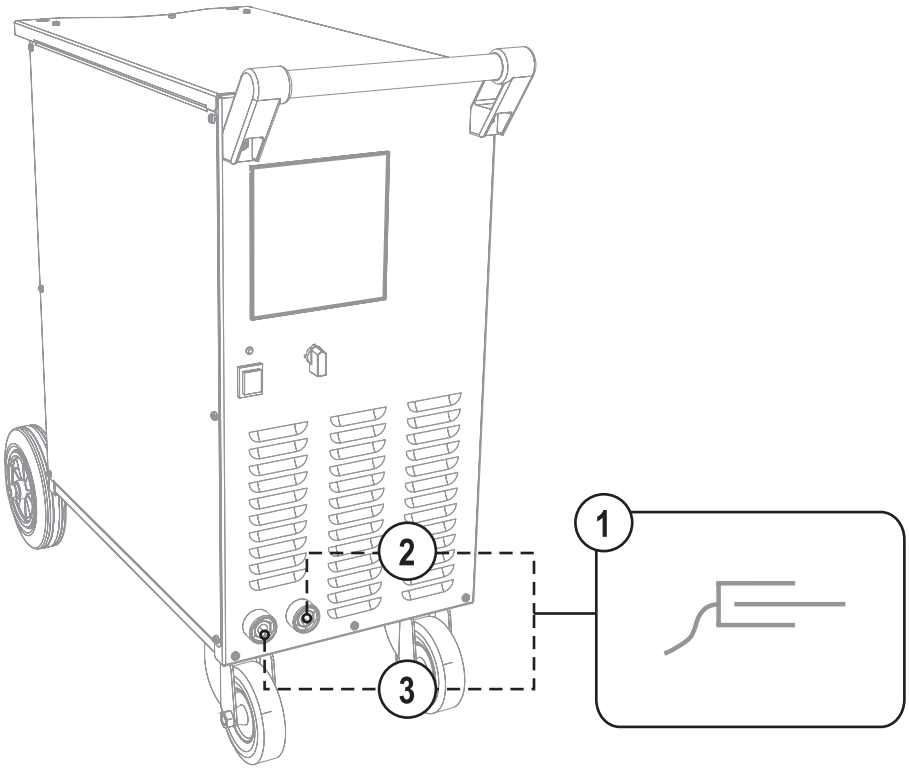

Figure 5-4

Item	Symbol	Description
1		**Workpiece**
2	2	**Connection socket, workpiece lead** Choke tapping "soft"
3	1	**Connection socket, workpiece lead** "Hard" choke tapping

- Insert cable plug on the workpiece lead into the connection socket for workpiece lead 1 or 2 (depending on the application or shielding gas used) and lock by turning to the right.

6 Maintenance, care and disposal

DANGER

Risk of injury from electric shock!
Cleaning machines that are not disconnected from the mains can lead to serious injuries!

- Disconnect the machine completely from the mains.
- Remove the mains plug!
- Wait for 4 minutes until the capacitors have discharged!

6.1 General

When used in the specified environmental conditions and under normal operating conditions, this machine is largely maintenance-free and requires a minimum of care.

There are some points, which should be observed, to guarantee fault-free operation of your welding machine. Among these are regular cleaning and checking as described below, depending on the pollution level of the environment and the length of time the unit is in use.

6.2 Maintenance work, intervals

6.2.1 Daily maintenance tasks

- Mains supply lead and its strain relief
- Welding current cables (check that they are fitted correctly and secured)
- Gas tubes and their switching equipment (solenoid valve)
- Gas cylinder securing elements
- Operating, message, safety and adjustment devices (Functional test)
- Other, general condition

6.2.2 Monthly maintenance tasks

- Casing damage (front, rear and side walls)
- Transport rollers and their securing elements
- Transport elements (strap, lifting lugs, handle)
- Selector switches, command devices, emergency stop devices, voltage reducing devices, message and control lamps

6.2.3 Annual test (inspection and testing during operation)

NOTE

The welding machine may only be tested by competent, capable personsl.
A capable person is one who, because of his training, knowledge and experience, is able to recognise the dangers that can occur while testing welding power sources as well as possible subsequent damage and who is able to implement the required safety procedures.

For further information, please see the accompanying supplementary sheets "Machine and Company Data, Maintenance and Testing, Warranty"!

The former term of repetition test has been replaced due to a change in the corresponding standard with “Inspection and testing during operation”.

In addition to the regulations on the test given here, the relevant local laws and regulations must also be observed.

6.3 Repair Work

DANGER

Do not carry out any unauthorised repairs or modifications!
To avoid injury and equipment damage, the unit must only be repaired or modified by specialist, skilled persons!
The warranty becomes null and void in the event of unauthorised interference.

- Appoint only skilled persons for repair work (trained service personnel)!

Repair and maintenance work may only be performed by qualified authorised personnel; otherwise the right to claim under warranty is void. In all service matters, always consult the dealer who supplied the machine. Return deliveries of defective equipment subject to warranty may only be made through your dealer. When replacing parts, use only original spare parts. When ordering spare parts, please quote the machine type, serial number and item number of the machine, as well as the type designation and item number of the spare part.

6.4 Disposing of equipment

NOTE

Proper disposal!
The machine contains valuable raw materials, which should be recycled, and electronic components, which must be disposed of.

- Do not dispose of in household waste!
- Observe the local regulations regarding disposal!

6.4.1 Manufacturer's declaration to the end user

- According to European provisions (guideline 2002/96/EG of the European Parliament and the Council of January, 27th 2003), used electric and electronic equipment may no longer be placed in unsorted municipal waste. It must be collected separately. The symbol depicting a waste container on wheels indicates that the equipment must be collected separately.
  This machine is to be placed for disposal or recycling in the waste separation systems provided for this purpose.
- According to German law (law governing the distribution, taking back and environmentally correct disposal of electric and electronic equipment (ElektroG) from 16.03.2005), used machines are to be placed in a collection system separate from unsorted municipal waste. The public waste management utilities (communities) have created collection points at which used equipment from private households can be disposed of free of charge.
- Information about giving back used equipment or about collections can be obtained from the respective municipal administration office.
- EWM participates in an approved waste disposal and recycling system and is registered in the Used Electrical Equipment Register (EAR) under number WEEE DE 57686922.
- In addition to this, returns are also possible throughout Europe via EWM sales partners.

6.5 Meeting the requirements of RoHS

We, EWM HIGHTEC Welding GmbH Mündersbach, hereby confirm that all products supplied by us which are affected by the RoHS Directive, meet the requirements of the RoHS (Directive 2002/95/EC).

7 Rectifying faults

All products are subject to rigorous production checks and final checks. If, despite this, something fails to work at any time, please check the product using the following flowchart. If none of the fault rectification procedures described leads to the correct functioning of the product, please inform your authorised dealer.

7.1 Customer checklist

Legend

: Fault/Cause

: Remedy

NOTE

The correct machine equipment for the material and process gas in use is a fundamental requirement for perfect operation!

Wire feed problems

- Contact nozzle blocked
  - Clean, spray with separating agent and replace if necessary
- Setting the spool brake (see "Setting the spool brake" chapter)
  - Check settings and correct if necessary
- Setting pressure units (see "Inching wire electrodes" chapter)
  - Check settings and correct if necessary
- Worn wire rolls
  - Check and replace if necessary
- Wire feed motor without supply voltage (automatic cutout triggered by overloading)
  - Reset triggered fuse (rear of the power source) by pressing the key button
- Kinked hose packages
  - Extend and lay out the torch hose package
- Wire guide core or spiral is dirty or worn
  - Clean core or spiral; replace kinked or worn cores

Functional errors

- Machine control without displaying the signal lights after switching on
  - Phase failure > check mains connection (fuses)
- No welding performance
  - Phase failure > check mains connection (fuses)
- Various parameters cannot be set
  - Entry level is blocked, disable access lock (see chapter entitled "Lock welding parameters against unauthorised access")
- Connection problems
  - Make control lead connections and check that they are fitted correctly.
- Loose welding current connections
  - Tighten power connections on the torch and/or on the workpiece
  - Tighten contact tip/collet correctly

7.2 Machine faults (error messages)

NOTE

Only with the M2.4x machine control.

Error message	Possible cause	Remedy
Pol. (M2.41)	The selected welding current polarity does not match the machine configuration	Set the changeover switch for the welding current polarity (welding voltage display) on the rear of the machine's power source to the selected polarity.

7.2.1 Check the machine type setting

NOTE

After switching on, the machine type that has been set is displayed for a short time, denoted as "tyP".
If the machine type displayed does not match the machine, you have to correct this setting.

„tyP 00“	Saturn 251
„tyP d00“	Saturn 256
„tyP 01“	Saturn 301
„tyP 02“	Saturn 351
„tyP d02“	Wega 351, Saturn 351 DG
„tyP d03”	Wega 401,451
„tyP d04”	Wega 501,601

7.3 Setting the machine type

NOTE

Only with the M2.4x machine control.

Operating element	Action	Result	
	1 x	Switch off the welding machine.	
+		Press and hold both buttons.	
	1 x	Switch on the welding machine, "Anl" is shown on the display.	
m/min		Whilst "Anl" is being displayed, set the machine type:	
		0 - Saturn 251	2 - Saturn 351
		1 - Saturn 301	3 - all decompact (DK)

7.3.1 Reset via machine control

NOTE

M2.40 control
The first action should always be to check and if necessary correct the machine type setting.

All user settings will be overwritten with factory settings and must therefore be checked afterwards, or set up again!
After resetting the machine control to the factory settings, it is essential that the machine type used is checked and reset if necessary.

Operating element	Action	Result
	1 x	Switch off the welding machine.
+		Press and hold both buttons.
	1 x	Switch on the welding machine, "rES" is shown briefly on the display.

8 Technical data

NOTE

☞ **Performance specifications and guarantee only in connection with original spare and replacement parts!**

8.1 Saturn 256 DG

Switching steps	12
Welding current setting range	30 A - 250 A
Duty cycle at 25°C ambient temperature	
30 %	250 A
100 %	140 A
Open circuit voltage	17,8 V to 38,3 V
Mains connection lead	3 x 2,5 mm²
Mains voltage (tolerances)	230 V (+/- 15%)
Frequency	50/60 Hz
Mains fuse (slow-blow safety fuse)	25 A
Max. connected power	9,7 kVA
Recommended generator power	13,1 kVA
Workpiece lead	50 mm²
Cosφ	0.98
Insulation class/protection classification	H/IP 23
Ambient temperature	-20°C to +40°C
Machine cooling / torch cooling	Fan / gas
Dimensions (L x W x H in mm)	950 x 410 x 860
Weight	93 kg
Constructed to standards	IEC 60974-1, -10 S / CE

9 Accessories, options

9.1 General accessories

Type	Designation	Item no.
AK300	Adapter for K300 basket coil	094-001803-00001
G1 2M G1/4 R 2M	Gas hose	094-000010-00001
GS16L G1/4" SW 17	Pilot static tube	094-000914-00000
GS25L G1/4" SW 17	Pilot static tube	094-001100-00000
WK50QMM 4M KL	Workpiece cable, clamp	092-000003-00000
50QMM MIG G 1M	Intermediate hose package, gas	094-000579-00000
50QMM MIG G 5M	Intermediate hose package, gas	094-000579-00001
50QMM MIG G 10M	Intermediate hose package, gas	094-000579-00002

10 Appendix A

10.1 Setting instructions

Saturn 256

mm	mm	SG2/3 G3/4 Si1 Ar82/18 m/min			SG2/3 G3/4 Si1 CO_2 100 m/min			AlMg Ar100 m/min			CrNi Ar98/2 m/min		
				1 / 2			1 / 2			1 / 2			1 / 2
0,8	0,8	2,7	1	1	1,8	1	2	8,5	1	2	2,7	1	1
	1,0	1,8	1	1	1,5	1	2	-	-	-	-	-	-
1	0,8	3,5	3	1	4,0	4	2	8,5	1	2	3,5	2	1
	1,0	1,9	2	1	2,0	3	2	5,5	1	2	1,7	1	1
	1,2	1,8	3	1	1,5	3	2	-	-	-	1,4	1	1
1,5	0,8	4,8	4	1	4,8	6	2	12,0	3	2	5,0	3	1
	1,0	2,3	3	1	2,9	4	2	7,7	3	2	3,2	3	1
	1,2	2,2	4	2	1,8	4	2	4,2	1	2	2,4	3	1
2	0,8	5,2	5	1	5,3	7	2	13,5	4	2	6,2	4	1
	1,0	3,2	4	2	4,1	6	2	10,4	6	2	3,9	4	2
	1,2	3,0	6	2	2,5	6	2	7,2	4	2	3,0	4	1
3	0,8	9,1	8	2	7,6	9	2	18,1	7	2	9,8	6	2
	1,0	4,6	6	2	5,1	8	2	11,6	7	2	6,2	6	2
	1,2	4,2	8	2	4,1	9	2	9,0	6	2	4,5	6	2
4	0,8	10,3	9	2	10,0	10	2	22,2	9	2	11,3	7	2
	1,0	5,7	8	2	8,0	10	2	13,5	8	2	7,3	7	2
	1,2	5,5	10	2	5,8	11	2	10,2	7	2	6,5	8	2
5	0,8	13,0	10	2	14,0	12	2	24,0	10	2	13,5	8	2
	1,0	6,8	9	2	9,4	11	2	15,3	9	2	7,3	7	2
	1,2	6,2	11	2	6,8	12	2	12,0	8	2	7,0	9	2
6	0,8	14,9	11	2	14,0	12	2	24,0	10	2	14,6	9	2
	1,0	8,5	10	2	12,0	12	2	17,8	10	2	9,0	8	2
	1,2	7,5	12	2	6,8	12	2	13,0	9	2	7,9	10	2
8	0,8	19,0	12	2	14,0	12	2	24,0	10	2	16,2	10	2
	1,0	13,0	12	2	12,0	12	2	23,0	12	2	11,0	10	2
	1,2	7,5	12	2	6,8	12	2	14,2	10	2	10,2	12	2
10	0,8	19,0	12	2	14,0	12	2	24,0	10	2	24,0	12	2
	1,0	13,0	12	2	12,0	12	2	23,0	12	2	14,5	12	2
	1,2	7,5	12	2	6,8	12	2	17,5	12	2	10,2	12	2

094-016376-00500

Figure 10-1

11 Appendix B

11.1 Overview of EWM branches

www.ewm-group.com
www.ewm-tv.de

EWM HIGHTEC WELDING GmbH
Dr. Günter-Henle-Straße 8
56271 Mündersbach
Deutschland
Tel: +49 2680 181-0 · Fax: -244
www.ewm-group.com · info@ewm-group.com

EWM SCHWEISSTECHNIK-HANDELS-GMBH
In der Florinskaul 14-16
56218 Mülheim-Kärlich · Deutschland
Tel: +49 261 988898-0 · Fax: -244
www.ewm-group.com/handel · nl-muelheim@ewm-group.com

EWM SCHWEISSTECHNIK-HANDELS-GMBH
Sachsstraße 28
50259 Pulheim · Deutschland
Tel: +49 2234 697-047 · Fax: -048
www.ewm-group.com/handel · nl-koeln@ewm-group.com

EWM HIGHTEC WELDING GmbH
Niederlassung Nord
Lindenstraße 1a
38723 Seesen-Rhüden · Deutschland
Tel: +49 5384 90798-0 · Fax: -20
www.ewm-group.com/handel · nl-nord@ewm-group.com

EWM HIGHTEC WELDING s.r.o.
Tř. 9. kvetna 718
407 53 Jiříkov · Tschechische Republik
Tel: +420 412 358-551 · Fax: -20
www.ewm-group.com/cz · info.cz@ewm-group.com

EWM HIGHTEC WELDING SALES s.r.o.
Prodejní a poradenské centrum
Tyršova 2106
256 01 Benešov u Prahy · Tschechische Republik
Tel: +420 317 729-517 · Fax: -712
www.ewm-group.com/cz · sales.cz@ewm-group.com

EWM HIGHTEC WELDING UK Ltd.
Unit 2B Coopies Way
Coopies Lane Industrial Estate
Morpeth · Northumberland · NE 61 6JN· Großbritannien
Tel: +44 1670 505875 · Fax: -514305
www.ewm-group.com/uk · info.uk@ewm-group.com

EWM HIGHTEC WELDING GmbH
Scharnsteinerstraße 15
4810 Gmunden · Österreich
Tel: +43 7612 778 02-0 · Fax: -20
www.ewm-group.com/at · info.at@ewm-group.com

EWM HIGHTEC WELDING (Kunshan) Ltd.
10 Yuanshan Road, Kunshan
New & High-tech Industry Development Zone
Kunshan · Jiangsu · 215300 · Volksrepublik China
Tel: +86 512 57867-188 · Fax: -182
www.ewm-group.com/cn · info.cn@ewm-group.com

EWM HIGHTEC WELDING FZCO
Regional Office Middle East
JAFZA View 18 F 14 05 · P.O. Box 262851
Jebel Ali Free Zone · Dubai · Vereinigte Arabische Emirate
Tel: +971 4 8857-789 · Fax: -500
www.ewm-group.com/me · info.me@ewm-group.com