Operating instructions

EN

Welding machine

Tetrix 230 AC/DC Smart 5P TM
Tetrix 230 AC/DC Smart 8P TM

099-000158-EW501

05.10.2015

General instructions

CAUTION

Read the operating instructions!
The operating instructions provide an introduction to the safe use of the products.

- Read the operating instructions for all system components!
- Observe accident prevention regulations!
- Observe all local regulations!
- Confirm with a signature where appropriate.

☞ ***In the event of queries on installation, commissioning, operation or special conditions at the installation site, or on usage, please contact your sales partner or our customer service department on +49 2680 181-0.***
A list of authorised sales partners can be found at www.ewm-group.com.

Liability relating to the operation of this equipment is restricted solely to the function of the equipment. No other form of liability, regardless of type, shall be accepted. This exclusion of liability shall be deemed accepted by the user on commissioning the equipment.

The manufacturer is unable to monitor whether or not these instructions or the conditions and methods are observed during installation, operation, usage and maintenance of the equipment.
An incorrectly performed installation can result in material damage and injure persons as a result. For this reason, we do not accept any responsibility or liability for losses, damages or costs arising from incorrect installation, improper operation or incorrect usage and maintenance or any actions connected to this in any way.

1 Contents

2 Safety instructions

2.1 Notes on the use of these operating instructions

DANGER

Working or operating procedures which must be closely observed to prevent imminent serious and even fatal injuries.

- Safety notes include the "DANGER" keyword in the heading with a general warning symbol.
- The hazard is also highlighted using a symbol on the edge of the page.

WARNING

Working or operating procedures which must be closely observed to prevent serious and even fatal injuries.

- Safety notes include the "WARNING" keyword in the heading with a general warning symbol.
- The hazard is also highlighted using a symbol in the page margin.

CAUTION

Working or operating procedures which must be closely observed to prevent possible minor personal injury.

- The safety information includes the "CAUTION" keyword in its heading with a general warning symbol.
- The risk is explained using a symbol on the edge of the page.

CAUTION

Working and operating procedures which must be followed precisely to avoid damaging or destroying the product.

- The safety information includes the "CAUTION" keyword in its heading without a general warning symbol.
- The hazard is explained using a symbol at the edge of the page.

☞ ***Special technical points which users must observe.***

Instructions and lists detailing step-by-step actions for given situations can be recognised via bullet points, e.g.:

- Insert the welding current lead socket into the relevant socket and lock.

2.2 Explanation of icons

Symbol	Description
	Special technical points which users must observe.
	Correct
	Wrong
	Press
	Do not press
	Press and keep pressed
	Turn
	Switch
	Switch off machine
	Switch on machine
ENTER	enter the menu
NAVIGATION	Navigating in the menu
EXIT	Exit the menu
4 s	Time display (example: wait 4s/press)
	Interruption in the menu display (other setting options possible)
	Tool not required/do not use
	Tool required/use

2.3 General

DANGER

Electromagnetic fields!
The power source may cause electrical or electromagnetic fields to be produced which could affect the correct functioning of electronic equipment such as IT or CNC devices, telecommunication lines, power cables, signal lines and pacemakers.

- Observe the maintenance instructions - See 6 Maintenance, care and disposal chapter!
- Unwind welding leads completely!
- Shield devices or equipment sensitive to radiation accordingly!
- The correct functioning of pacemakers may be affected (obtain advice from a doctor if necessary).

Do not carry out any unauthorised repairs or modifications!
To avoid injury and equipment damage, the unit must only be repaired or modified by specialist, skilled persons!
The warranty becomes null and void in the event of unauthorised interference.

- Appoint only skilled persons for repair work (trained service personnel)!

Electric shock!
Welding machines use high voltages which can result in potentially fatal electric shocks and burns on contact. Even low voltages can cause you to get a shock and lead to accidents.

- Do not touch any live parts in or on the machine!
- Connection cables and leads must be free of faults!
- Switching off alone is not sufficient!
- Place welding torch and stick electrode holder on an insulated surface!
- The unit should only be opened by specialist staff after the mains plug has been unplugged!
- Only wear dry protective clothing!
- Wait for 4 minutes until the capacitors have discharged!

WARNING

Risk of injury due to radiation or heat!
Arc radiation results in injury to skin and eyes.
Contact with hot workpieces and sparks results in burns.

- Use welding shield or welding helmet with the appropriate safety level (depending on the application)!
- Wear dry protective clothing (e.g. welding shield, gloves, etc.) according to the relevant regulations in the country in question!
- Protect persons not involved in the work against arc beams and the risk of glare using safety curtains!

Explosion risk!
Apparently harmless substances in closed containers may generate excessive pressure when heated.

- Move containers with inflammable or explosive liquids away from the working area!
- Never heat explosive liquids, dusts or gases by welding or cutting!

WARNING

Smoke and gases!
Smoke and gases can lead to breathing difficulties and poisoning. In addition, solvent vapour (chlorinated hydrocarbon) may be converted into poisonous phosgene due to the ultraviolet radiation of the arc!
- Ensure that there is sufficient fresh air!
- Keep solvent vapour away from the arc beam field!
- Wear suitable breathing apparatus if appropriate!

Fire hazard!
Flames may arise as a result of the high temperatures, stray sparks, glowing-hot parts and hot slag produced during the welding process.
Stray welding currents can also result in flames forming!
- Check for fire hazards in the working area!
- Do not carry any easily flammable objects such as matches or lighters.
- Keep appropriate fire extinguishing equipment to hand in the working area!
- Thoroughly remove any residue of flammable substances from the workpiece before starting welding.
- Only continue work on welded workpieces once they have cooled down.
  Do not allow to come into contact with flammable material!
- Connect welding leads correctly!

Risk of accidents if these safety instructions are not observed!
Non-observance of these safety instructions is potentially fatal!
- Carefully read the safety information in this manual!
- Observe the accident prevention regulations in your country.
- Inform persons in the working area that they must observe the regulations!

Danger when coupling multiple power sources!
Coupling multiple power sources in parallel or in series has to be carried out by qualified personnel and in accordance with the manufacturer's guidelines. Before bringing the power sources into service for arc welding operations, a test has to verify that they cannot exceed the maximum allowed open circuit voltage.
- Connection of the machine may be carried out by qualified personnel only!
- When decommissioning individual power sources, all mains and welding current leads have to be safely disconnected from the welding system as a whole. (Danger due to inverse voltages!)
- Do not couple welding machines with pole reversing switch (PWS series) or machines for AC welding, as a minor error in operation can cause the welding voltages to be combined.

CAUTION

Noise exposure!
Noise exceeding 70 dBA can cause permanent hearing damage!
- Wear suitable ear protection!
- Persons located within the working area must wear suitable ear protection!

CAUTION

Obligations of the operator!
The respective national directives and laws must be observed for operation of the machine!

- National implementation of the framework directive (89/391/EWG), as well as the associated individual directives.
- In particular, directive (89/655/EWG), on the minimum regulations for safety and health protection when staff members use equipment during work.
- The regulations regarding work safety and accident prevention for the respective country.
- Setting up and operating the machine according to IEC 60974-9.
- Check at regular intervals that users are working in a safety-conscious way.
- Regular checks of the machine according to IEC 60974-4.

Damage due to the use of non-genuine parts!
The manufacturer's warranty becomes void if non-genuine parts are used!

- Only use system components and options (power sources, welding torches, electrode holders, remote controls, spare parts and replacement parts, etc.) from our range of products!
- Only insert and lock accessory components into the relevant connection socket when the machine is switched off.

Damage to the machine due to stray welding currents!
Stray welding currents can destroy protective earth conductors, damage equipment and electronic devices and cause overheating of components leading to fire.

- Make sure all welding leads are securely connected and check regularly.
- Always ensure a proper and secure electrical connection to the workpiece!
- Set up, attach or suspend all conductive power source components like casing, transport vehicle and crane frames so they are insulated!
- Do not place any other electronic devices such as drillers or angle grinders, etc., on the power source, transport vehicle or crane frames unless they are insulated!
- Always put welding torches and electrode holders on an insulated surface when they are not in use!

Mains connection
Requirements for connection to the public mains network
High-performance machines can influence the mains quality by taking current from the mains network. For some types of machines, connection restrictions or requirements relating to the maximum possible line impedance or the necessary minimum supply capacity at the interface with the public network (Point of Common Coupling, PCC) can therefore apply. In this respect, attention is also drawn to the machines' technical data. In this case, it is the responsibility of the operator, where necessary in consultation with the mains network operator, to ensure that the machine can be connected.

CAUTION

EMC Machine Classification

In accordance with IEC 60974-10, welding machines are grouped in two electromagnetic compatibility classes - See 8 Technical data chapter:

Class A machines are not intended for use in residential areas where the power supply comes from the low-voltage public mains network. When ensuring the electromagnetic compatibility of class A machines, difficulties can arise in these areas due to interference not only in the supply lines but also in the form of radiated interference.

Class B machines fulfil the EMC requirements in industrial as well as residential areas, including residential areas connected to the low-voltage public mains network.

Setting up and operating

When operating arc welding systems, in some cases, electro-magnetic interference can occur although all of the welding machines comply with the emission limits specified in the standard. The user is responsible for any interference caused by welding.

In order to **evaluate** any possible problems with electromagnetic compatibility in the surrounding area, the user must consider the following: (see also EN 60974-10 Appendix A)

- Mains, control, signal and telecommunication lines
- Radios and televisions
- Computers and other control systems
- Safety equipment
- The health of neighbouring persons, especially if they have a pacemaker or wear a hearing aid
- Calibration and measuring equipment
- The immunity to interference of other equipment in the surrounding area
- The time of day at which the welding work must be carried out

Recommendations for **reducing interference emission**

- Mains connection, e.g. additional mains filter or shielding with a metal tube
- Maintenance of the arc welding equipment
- Welding leads should be as short as possible and run closely together along the ground
- Potential equalization
- Earthing of the workpiece. In cases where it is not possible to earth the workpiece directly, it should be connected by means of suitable capacitors.
- Shielding from other equipment in the surrounding area or the entire welding system

2.4 Transport and installation

WARNING

Incorrect handling of shielding gas cylinders!
Incorrect handling of shielding gas cylinders can result in serious and even fatal injury.

- Observe the instructions from the gas manufacturer and in any relevant regulations concerning the use of compressed air!
- Place shielding gas cylinders in the holders provided for them and secure with fixing devices.
- Avoid heating the shielding gas cylinder!

Risk of accident due to improper transport of machines that may not be lifted!
Do not lift or suspend the machine! The machine can fall down and cause injuries! The handles and brackets are suitable for transport by hand only!

- The machine may not be lifted by crane or suspended!

CAUTION

Risk of tipping!
There is a risk of the machine tipping over and injuring persons or being damaged itself during movement and set up. Tilt resistance is guaranteed up to an angle of 10° (according to IEC 60974-1).

- Set up and transport the machine on level, solid ground.
- Secure add-on parts using suitable equipment.

Damage due to supply lines not being disconnected!
During transport, supply lines which have not been disconnected (mains supply leads, control leads, etc.) may cause hazards such as connected equipment tipping over and injuring persons!

- Disconnect supply lines!

CAUTION

Equipment damage when not operated in an upright position!
The units are designed for operation in an upright position!
Operation in non-permissible positions can cause equipment damage.

- Only transport and operate in an upright position!

2.4.1 Ambient conditions

CAUTION

Installation site!
The machine must not be operated in the open air and must only be set up and operated on a suitable, stable and level base!

- The operator must ensure that the ground is non-slip and level, and provide sufficient lighting for the place of work.
- Safe operation of the machine must be guaranteed at all times.

CAUTION

Equipment damage due to dirt accumulation!
Unusually high quantities of dust, acid, corrosive gases or substances may damage the equipment.

- Avoid high volumes of smoke, vapour, oil vapour and grinding dust!
- Avoid ambient air containing salt (sea air)!

Non-permissible ambient conditions!
Insufficient ventilation results in a reduction in performance and equipment damage.

- Observe the ambient conditions!
- Keep the cooling air inlet and outlet clear!
- Observe the minimum distance of 0.5 m from obstacles!

2.4.1.1 In operation

Temperature range of the ambient air:

- -25 °C to +40 °C

Relative air humidity:

- Up to 50% at 40 °C
- Up to 90% at 20 °C

2.4.1.2 Transport and storage

Storage in an enclosed space, temperature range of the ambient air:

- -30 °C to +70 °C

Relative air humidity

- Up to 90% at 20 °C

3 Intended use

WARNING

Hazards due to improper usage!
Hazards may arise for persons, animals and material objects if the equipment is not used correctly. No liability is accepted for any damages arising from improper usage!

- The equipment must only be used in line with proper usage and by trained or expert staff!
- Do not modify or convert the equipment improperly!

3.1 Applications

3.1.1 TIG welding

TIG welding with alternating or direct current. Arc ignition optionally by means of non-contact HF ignition or contact ignition with Liftarc.

3.1.1.1 TIG activArc welding

The EWM activArc process, thanks to the highly dynamic controller system, ensures that the power supplied is kept virtually constant in the event of changes in the distance between the welding torch and the weld pool, e.g. during manual welding. Voltage losses as a result of a shortening of the distance between the torch and molten pool are compensated by a current rise (ampere per volt - A/V), and vice versa. This helps prevents the tungsten electrode sticking in the molten pool and the tungsten inclusions are reduced. This is particularly useful in tacking and in spot welding.

3.1.1.2 spotArc

This process is suitable for tack welding or joint welding of metal sheets made from steel and CrNi alloys up to a thickness of approximately 2.5 mm. Metal sheets of different thicknesses can also be welded on top of one another. As this is a one-sided process, it is also possible to weld metal sheets onto tubular sections such as round or square pipes. In arc spot welding, the arc melts through the upper metal sheet and the lower metal sheet is melted onto it. This produces flat, fine-textured welding tacks which require little or no post weld work, even in visible areas.

3.1.1.3 Spotmatic

In contrast to the operating mode spotArc, the arc ignites not by pressing the torch trigger as is usual, but by shortly touching the tungsten electrode against the workpiece. The torch trigger is used for process activation.

3.1.2 MMA welding

Manual arc welding or, for short, MMA welding. It is characterised by the fact that the arc burns between a melting electrode and the molten pool. There is no external protection; any protection against the atmosphere comes from the electrode.

3.2 Documents which also apply

3.2.1 Warranty

☞ ***For more information refer to the "Warranty registration" brochure supplied and our information regarding warranty, maintenance and testing at www.ewm-group.com!***

3.2.2 Declaration of Conformity

The designated machine conforms to EC Directives and standards in terms of its design and construction:

- EC Low Voltage Directive (2006/95/EC),
- EC EMC Directive (2004/108/EC),

This declaration shall become null and void in the event of unauthorised modifications, improperly conducted repairs, non-observance of the deadlines for the repetition test and / or non-permitted conversion work not specifically authorised by the manufacturer.
The original copy of the declaration of conformity is enclosed with the unit.

3.2.3 Welding in environments with increased electrical hazards

In compliance with IEC / DIN EN 60974, VDE 0544 the machines can be used in environments with an increased electrical hazard.

3.2.4 Service documents (spare parts and circuit diagrams)

DANGER

Do not carry out any unauthorised repairs or modifications!
To avoid injury and equipment damage, the unit must only be repaired or modified by specialist, skilled persons!
The warranty becomes null and void in the event of unauthorised interference.

- Appoint only skilled persons for repair work (trained service personnel)!

Original copies of the circuit diagrams are enclosed with the unit.

Spare parts can be obtained from the relevant authorised dealer.

3.2.5 Calibration/Validation

We hereby confirm that this machine has been tested using calibrated measuring equipment, as stipulated in IEC/EN 60974, ISO/EN 17662, EN 50504, and complies with the admissible tolerances.
Recommended calibration interval: 12 months

4 Machine description – quick overview

4.1 Front view

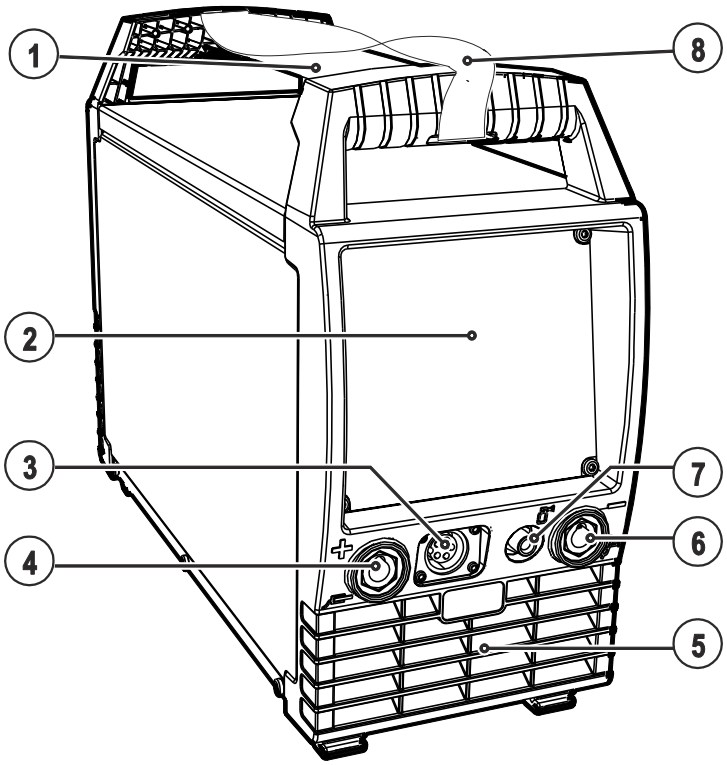

Figure 4-1

Item	Symbol	Description
1		**Carrying handle**
2		**Machine control- See 4.3 Machine control – Operating elements chapter**
3	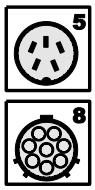	**Connection socket, 5-pole/8-pole (depending on variant)** 5-pole: Control cable TIG standard torch 8-pole: Control cable TIG up/down or potentiometer torch
4		**Connection socket, "+" welding current** • TIG: Connection for workpiece lead • MMA: Electrode holder or workpiece lead connection
5		**Cooling air inlet**
6		**Connection socket, "-" welding current** • TIG: TIG welding torch connection • MMA: Electrode holder or workpiece lead connection
7		**G¼" connecting nipple, "-" welding current** Shielding gas connection (with yellow insulating cap) for TIG welding torch

4.2 Rear view

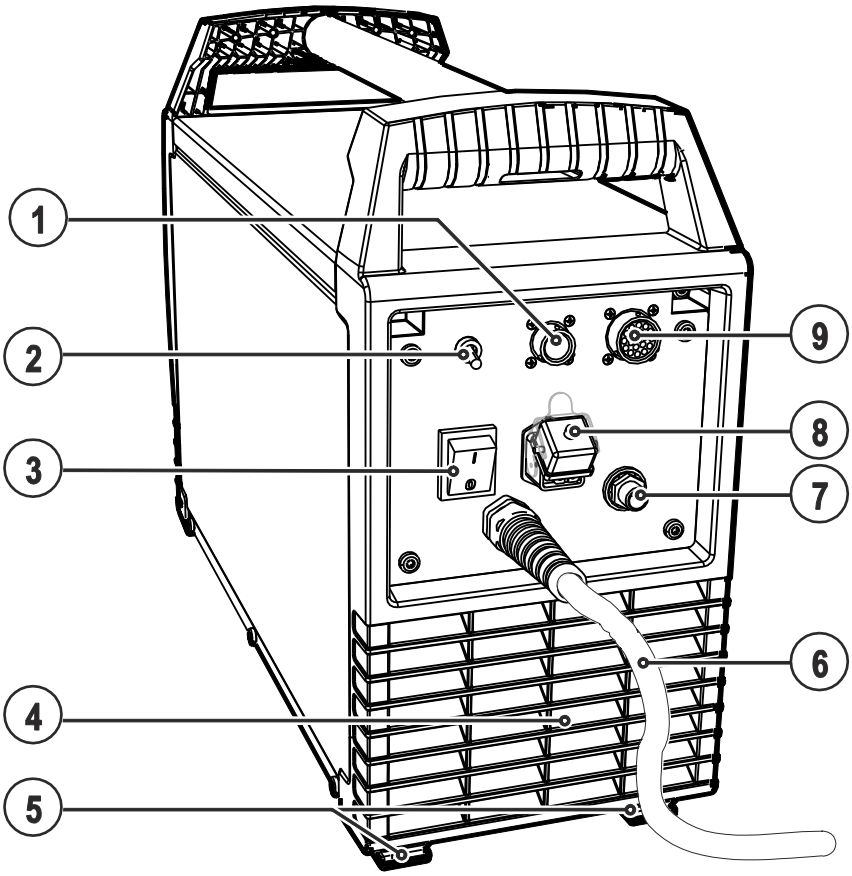

Figure 4-2

Item	Symbol	Description
1		**8-pole connection socket** Cooling unit control lead
2	HF	**Ignition type changeover switch- See 5.8.5 Arc ignition chapter** HF = Liftarc (contact ignition) HF = HF ignition
3		**Main switch, machine on/off**
4		**Cooling air outlet**
5		**Machine feet**
6		**Mains connection cable** - See 5.6 Mains connection chapter
7		**G¼" connecting nipple** Shielding gas connection on the pressure regulator.
8		**4-pole connection socket** Cooling unit voltage supply
9		**Connection socket, 19-pole** Remote control connection

4.3 Machine control – Operating elements

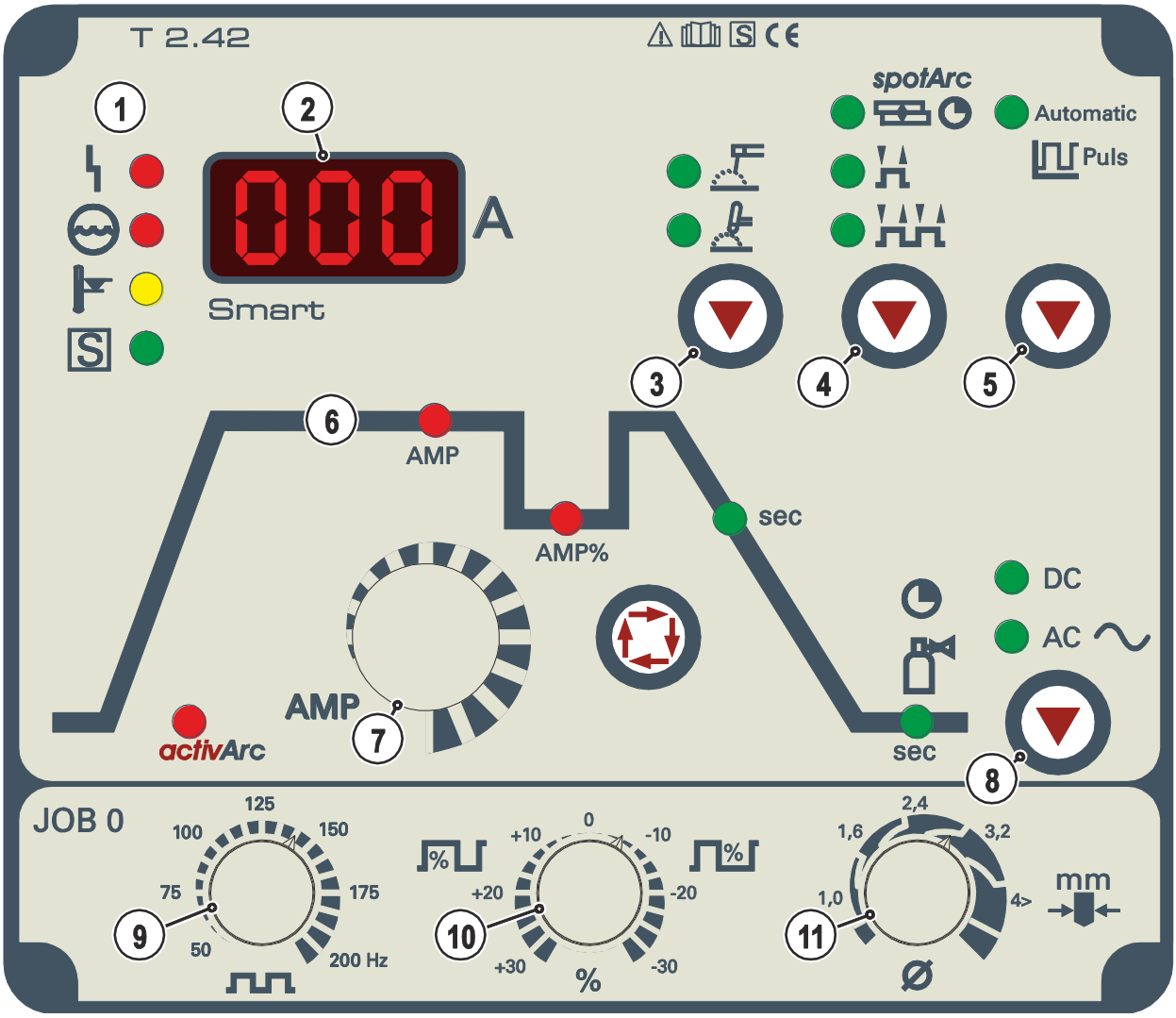

Figure 4-3

Item	Symbol	Description
1		**Error/status indicators** Collective interference signal light - See 7.2 Machine faults (error messages) chapter Water deficiency signal light (welding torch cooling) Excess temperature signal light safety sign signal light
2	000	**Display, 3-digit**
3		**Welding process button** MMA welding TIG welding
4		**Operating mode / Power-saving mode button** spotArc / Spotmatic (spot time setting range) Non-latched Latched Press for 3 s to put machine into power-saving mode. To reactivate, activate one of the operating elements- See 5.12.2 Power-saving mode (Standby) chapter.

Item	Symbol	Description
5		**TIG pulse welding / MMA pulse welding** **Automatic** TIG automated pulses (frequency and balance)
6		**Function sequence (see next chapter)**
7		**Welding parameter setting rotary dial** Setting currents, times and parameters.
8		**Welding current potential push-button** **DC** DC welding with negative polarity at the torch (or electrode holder) with respect to the workpiece. **AC** ∿ Alternating current welding with selectable current course- See 5.12.11 Choosing the alternating current waveform chapter.
9	⎍	**Alternating current frequency (TIG AC) rotary dial** 50 Hz to 200 Hz
10	%	**Alternating current balance (TIG AC) rotary dial** Max. setting range: - 30% to + 30%
11	Ø	**Tungsten electrode diameter/Ignition optimisation rotary dial** Infinitely adjustable from 1 mm to 4 mm or greater

4.3.1 Function sequence

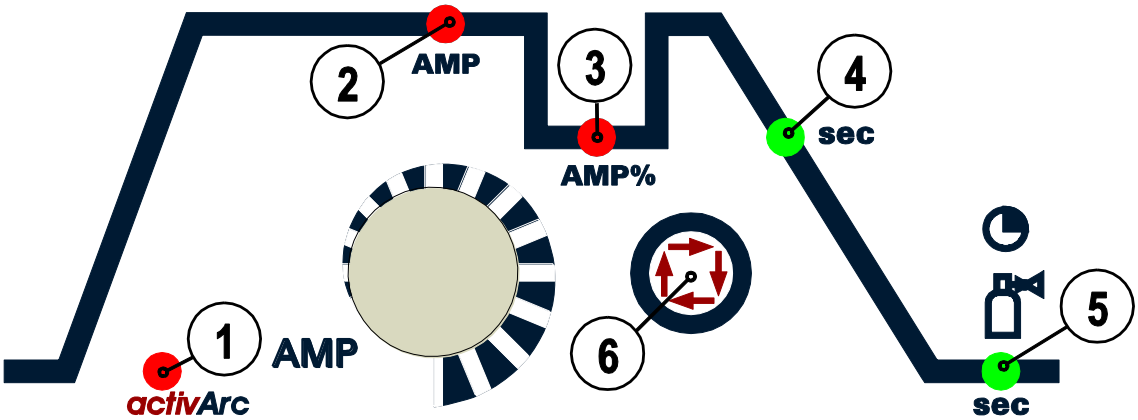

Figure 4-4

Item	Symbol	Description	
1	activArc	**activArc TIG welding process** • Switch activArc on or off • Correct the activArc characteristic (setting range: 0 to 100)	
2	AMP	**Main current (TIG) / pulse current** I min to I max (1 A increments)	**Main current (MMA)** I min to I max (1 A increments)
3	AMP%	**Secondary current (TIG) / pulse pause current** Setting range 1 % to 100 % (1 % increments). Percentage of the main current.	
4	sec	**Down-slope time (TIG)** 0.00 s to 20.0 s (0.1 s increments). The down-slope time can be set separately for non-latched and latched.	
5	sec	**Gas post-flow time (TIG)** Setting ranges: 0.1 s to 20.0 s (0.1 s increments).	
6		**Select welding parameters button** This button is used to select the welding parameters depending on the welding process and operating mode used.	

5 Design and function

5.1 General

WARNING

Risk of injury from electric shock!
Contact with live parts, e.g. welding current sockets, is potentially fatal!

- Follow safety instructions on the opening pages of the operating instructions.
- Commissioning may only be carried out by persons who have the relevant expertise of working with arc welding machines!
- Connection and welding leads (e.g. electrode holder, welding torch, workpiece lead, interfaces) may only be connected when the machine is switched off!

CAUTION

Insulate the arc welder from welding voltage!
Not all active parts of the welding current circuit can be shielded from direct contact. To avoid any associated risks it is vital for the welder to adhere to the relevant safety regulations. Even low voltages can cause a shock and lead to accidents.

- Wear dry and undamaged protective clothing (shoes with rubber soles/welder's gloves made from leather without any studs or braces)!
- Avoid direct contact with non-insulated connection sockets or connectors!
- Always place torches and electrode holders on an insulated surface!

Risk of burns on the welding current connection!
If the welding current connections are not locked, connections and leads heat up and can cause burns, if touched!

- Check the welding current connections every day and lock by turning in clockwise direction, if necessary.

Risk from electrical current!
If welding is carried out alternately using different methods and if a welding torch and an electrode holder remain connected to the machine, the open-circuit/welding voltage is applied simultaneously on all cables.

- The torch and the electrode holder should therefore always be placed on an insulated surface before starting work and during breaks.

CAUTION

Damage due to incorrect connection!
Accessory components and the power source itself can be damaged by incorrect connection!

- Only insert and lock accessory components into the relevant connection socket when the machine is switched off.
- Comprehensive descriptions can be found in the operating instructions for the relevant accessory components.
- Accessory components are detected automatically after the power source is switched on.

Using protective dust caps!
Protective dust caps protect the connection sockets and therefore the machine against dirt and damage.

- The protective dust cap must be fitted if there is no accessory component being operated on that connection.
- The cap must be replaced if faulty or if lost!

5.2 Workpiece lead, general

CAUTION

Risk of burns due to incorrect connection of the workpiece lead!
Paint, rust and dirt on the connection restrict the power flow and may lead to stray welding currents.
Stray welding currents may cause fires and injuries!

- Clean the connections!
- Fix the workpiece lead securely!
- Do not use structural parts of the workpiece as a return lead for the welding current!
- Take care to ensure faultless power connections!

5.3 Transport and installation

WARNING

Risk of accident due to improper transport of machines that may not be lifted!
Do not lift or suspend the machine! The machine can fall down and cause injuries! The handles and brackets are suitable for transport by hand only!

- The machine may not be lifted by crane or suspended!

CAUTION

Installation site!
The machine must not be operated in the open air and must only be set up and operated on a suitable, stable and level base!

- The operator must ensure that the ground is non-slip and level, and provide sufficient lighting for the place of work.
- Safe operation of the machine must be guaranteed at all times.

5.3.1 Adjusting the length of the carrying strap

☞ ***To demonstrate adjustment, lengthening the strap is shown in the figure. To shorten, the strap's loops must be inched in the opposite direction.***

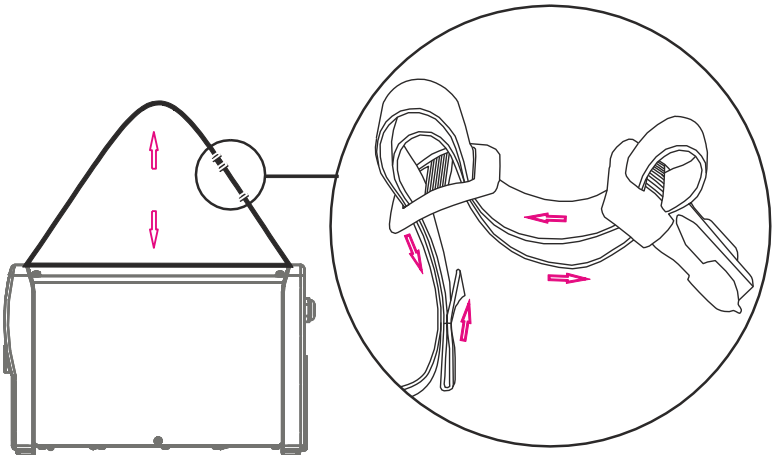

Figure 5-1

5.4 Machine cooling

To obtain an optimal duty cycle from the power components, the following precautions should be observed:

- Ensure that the working area is adequately ventilated.
- Do not obstruct the air inlets and outlets of the machine.
- Do not allow metal parts, dust or other objects to get into the machine.

5.5 Notes on the installation of welding current leads

☞ ***Incorrectly installed welding current leads can cause faults in the arc (flickering).***

☞ ***Lay the workpiece lead and hose package of power sources without HF igniter (MIG/MAG) for as long and as close as possible in parallel.***

☞ ***Lay the workpiece lead and hose package of power sources with HF igniter (TIG) for as long as possible in parallel with a distance of 20 cm to avoid HF sparkover.***

☞ ***Always keep a distance of at least 20 cm to leads of other power sources to avoid interferences***

☞ ***Always keep leads as short as possible! For optimum welding results max. 30 m (welding lead + intermediate hose package + torch lead).***

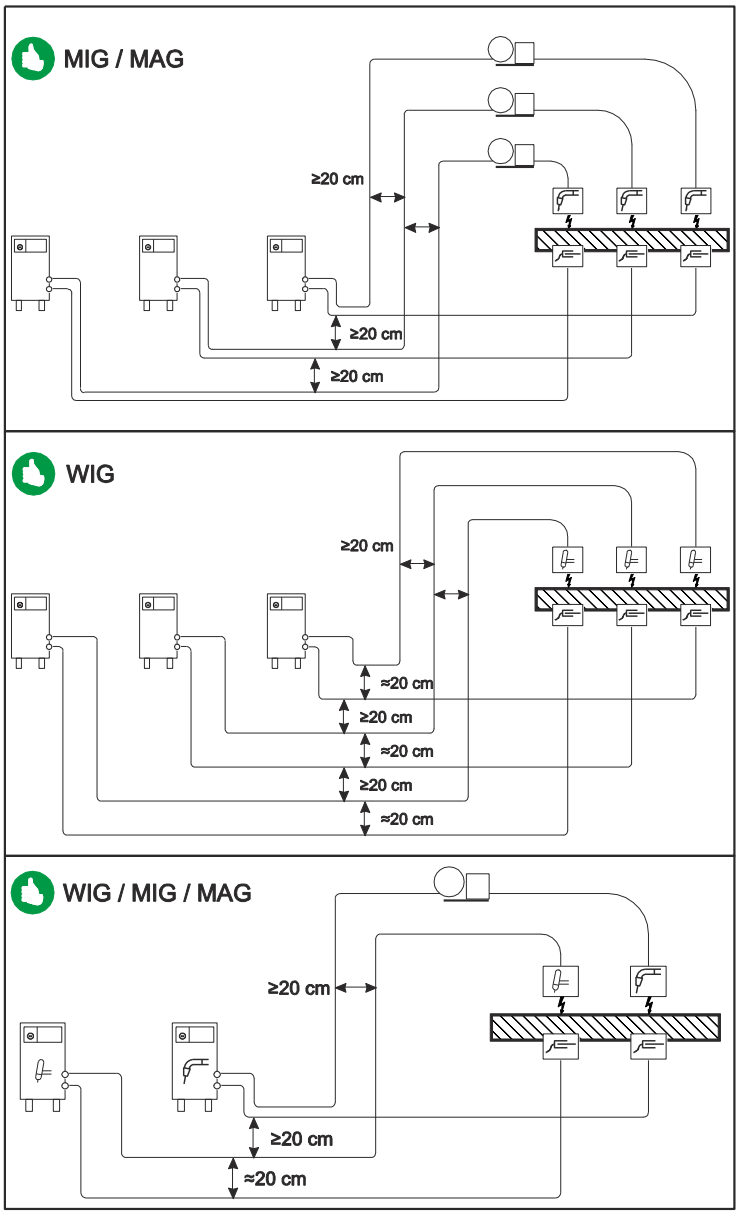

Figure 5-2

☞ ***Use an individual welding lead to the workpiece for each welding machine!***

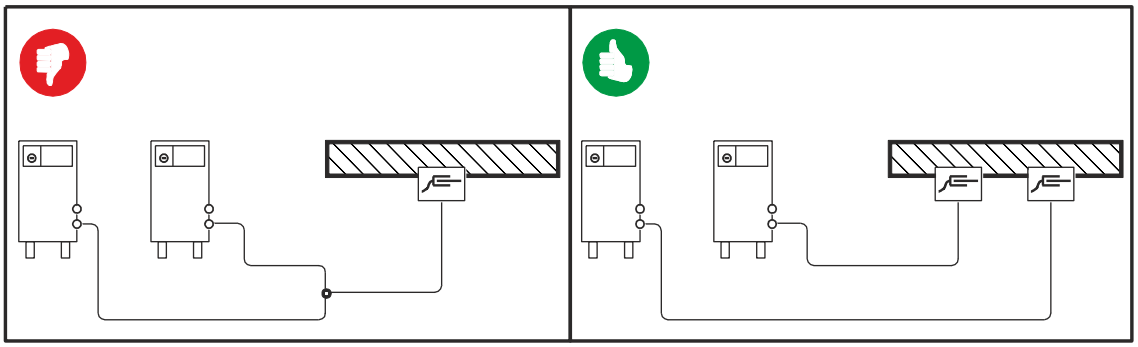

Figure 5-3

☞ ***Fully unroll welding current leads, torch hose packages and intermediate hose packages. Avoid loops!***

☞ ***Always keep leads as short as possible!***

☞ ***Lay any excess cable lengths in meanders.***

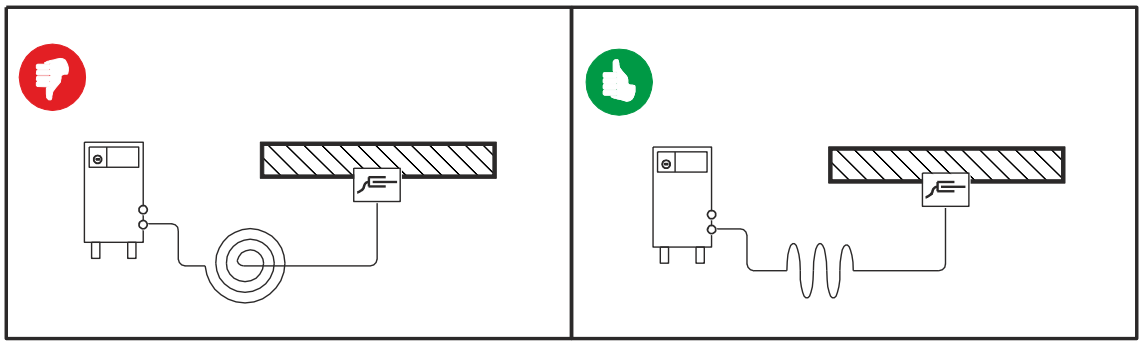

Figure 5-4

5.6 Mains connection

DANGER

Hazard caused by improper mains connection!
An improper mains connection can cause injuries or damage property!

- Only use machine with a plug socket that has a correctly fitted protective conductor.
- If a mains plug must be fitted, this may only be carried out by an electrician in accordance with the relevant national provisions or regulations!
- Mains plug, socket and lead must be checked regularly by an electrician!
- When operating the generator always ensure it is earthed as stated in the operating instructions. The resulting network has to be suitable for operating devices according to protection class 1.

5.6.1 Mains configuration

☞ ***The machine may only be connected to a one-phase system with two conductors and an earthed neutral conductor.***

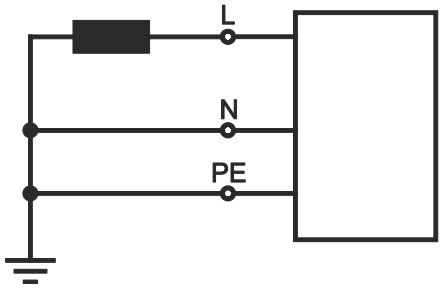

Figure 5-5

Legend

Item	Designation	Colour code
L	Outer conductor	brown
N	Neutral conductor	blue
PE	Protective conductor	green-yellow

CAUTION

Operating voltage - mains voltage!
The operating voltage shown on the rating plate must be consistent with the mains voltage, in order to avoid damage to the machine!

- - See 8 Technical data chapter!

- Insert mains plug of the switched-off machine into the appropriate socket.

5.7 Welding torch cooling system

5.7.1 Cooling module connection

☞ ***Please note the relevant documentation of the accessory components.***

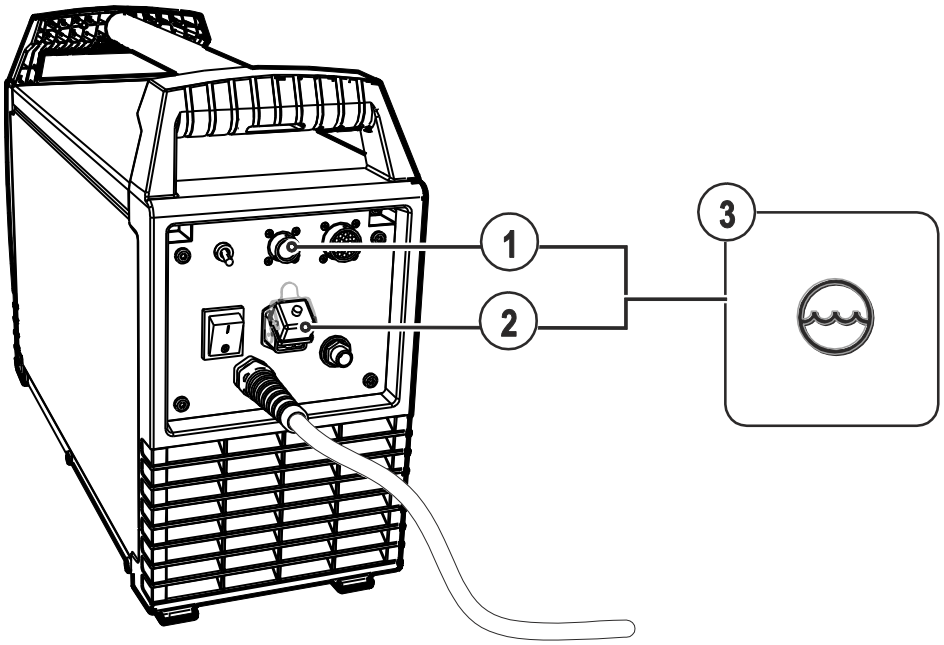

Figure 5-6

Item	Symbol	Description
1		**8-pole connection socket** Cooling unit control lead
2		**4-pole connection socket** Cooling unit voltage supply
3		**Cooling module**

Control and supply lead to the welding machine

The cooling module and welding machine are connected using two leads.

- Insert the control lead plug on the welding machine.
- Insert the power supply lead plug on the welding machine.

5.8 TIG welding

5.8.1 Welding torch and workpiece line connection

☞ ***Prepare welding torch according to the welding task in hand (see operating instructions for the torch).***

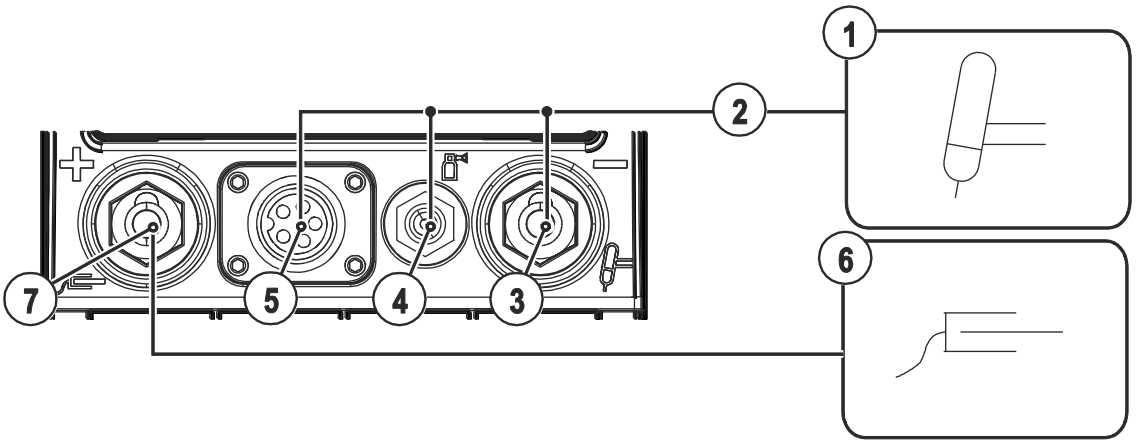

Figure 5-7

Item	Symbol	Description
1		**Welding torch**
2		**Welding torch hose package**
3	—	**Connection socket, "-" welding current** Welding current lead connection for TIG welding torch
4		**G¼" connecting nipple** TIG welding torch shielding gas connection
5	5 8	**Connection socket, 5-pole/8-pole (depending on variant)** 5-pole: Control cable TIG standard torch 8-pole: Control cable TIG up/down or potentiometer torch
6		**Workpiece**
7	+	**Connection socket for "+" welding current** Workpiece lead connection

- Insert the welding current plug on the welding torch into the welding current connection socket and lock by turning to the right.
- Remove yellow protective cap on G¼ connecting nipple.
- Screw welding torch shielding gas connection tightly onto the G¼" connection nipple.
- Insert control lead plus on the welding torch into the connection socket for the welding torch control lead (5-pole for a standard torch, 8-pole for up/down or potentiometer torches) and tighten.
- Insert the cable plug on the work piece lead into the "+" welding current connection socket and lock by turning to the right.

If fitted:

- Lock connecting nipples of the cooling water tubes into the corresponding quick connect couplings:
  Return line red to quick connect coupling, red (coolant return) and
  supply line blue to quick connect coupling, blue (coolant supply).

5.8.1.1 Torch connection options and pin assignments

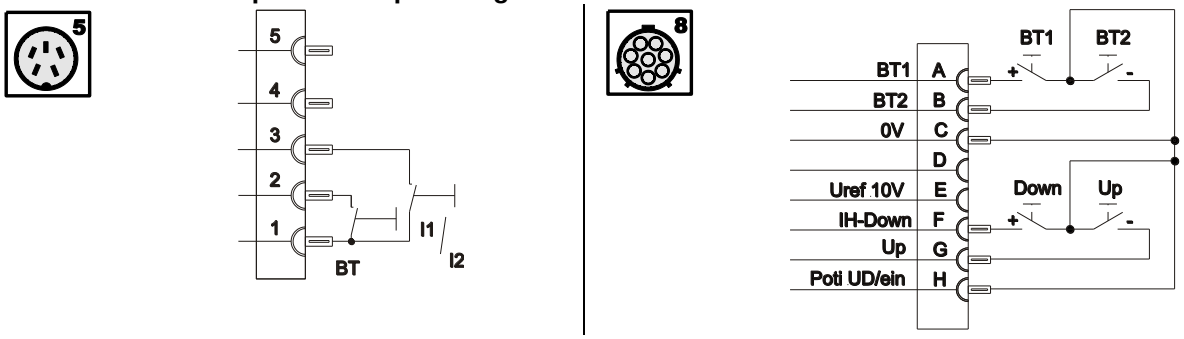

Figure 5-8

5.8.2 Shielding gas supply (shielding gas cylinder for welding machine)

WARNING

Incorrect handling of shielding gas cylinders!
Incorrect handling of shielding gas cylinders can result in serious and even fatal injury.

- Observe the instructions from the gas manufacturer and in any relevant regulations concerning the use of compressed air!
- Place shielding gas cylinders in the holders provided for them and secure with fixing devices.
- Avoid heating the shielding gas cylinder!

CAUTION

Faults in the shielding gas supply.
An unhindered shielding gas supply from the shielding gas cylinder to the welding torch is a fundamental requirement for optimum welding results. In addition, a blocked shielding gas supply may result in the welding torch being destroyed.

- Always re-fit the yellow protective cap when not using the shielding gas connection.
- All shielding gas connections must be gas tight.

☞ ***Before connecting the pressure regulator to the gas cylinder, open the cylinder valve briefly to expel any dirt.***

5.8.2.1 Connecting the shielding gas supply

- Place the shielding gas cylinder into the relevant cylinder bracket.
- Secure the shielding gas cylinder using a securing chain.

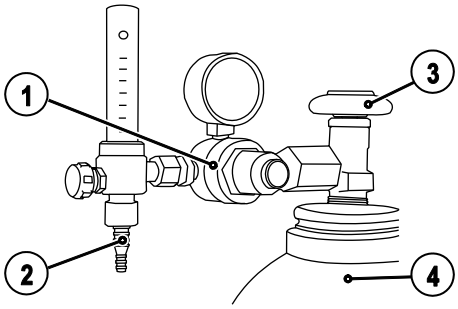

Figure 5-9

Item	Symbol	Description
1		**Pressure regulator**
2		**Shielding gas cylinder**
3		**Output side of the pressure regulator**
4		**Cylinder valve**

- Tighten the pressure regulator screw connection on the gas bottle valve to be gas-tight.
- Screw gas hose connection crown nut onto the output side of the pressure regulator.

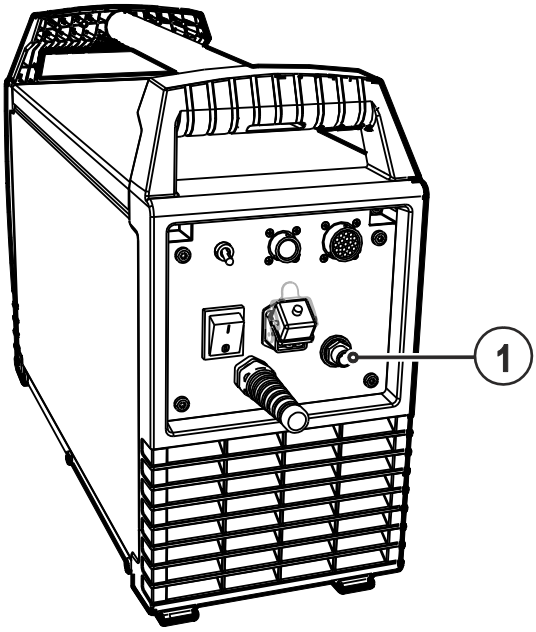

Figure 5-10

Item	Symbol	Description
1		**Connecting nipple G¼, shielding gas connection**

- Connect crown nut of the shielding gas line to the G¼“ connecting nipple.

5.8.2.2 Setting the shielding gas quantity

CAUTION

Electric shocks!
When setting the shielding gas quantity, high voltage ignition pulses or open circuit voltage are applied at the welding torch; these can lead to electric shocks and burning on contact.

- Keep the welding torch electrically insulated from persons, animals or equipment during the setting procedure.

- Press the torch trigger and set the shielding gas quantity with the flow gauge of the pressure regulator.

☞ ***Rule of thumb for the gas flow rate:***
Diameter of gas nozzle in mm corresponds to gas flow in l/min.
Example: 7mm gas nozzle corresponds to 7l/min gas flow.

☞ ***Incorrect shielding gas setting!***

- ***If the shielding gas setting is too low or too high, this can introduce air to the weld pool and may cause pores to form.***
- ***Adjust the shielding gas quantity to suit the welding task!***

5.8.3 Select welding task

The welding task is selected using the buttons on the machine control on the welding machine. Signal lights (LED) display the welding parameter selection.

Set the welding task in the following order:

Symbol	Description
	Welding process button MMA welding TIG welding
	Operating mode button spotArc spotArc (spot time setting range 0.01 sec. to 20.0 sec.) Non-latched Latched
	Welding current polarity button DC DC welding with negative polarity at the torch (or electrode holder) with respect to the workpiece AC AC welding with sinusoidal current output wave form Low noise level
	TIG pulse welding Automatic TIG automated pulses (frequency and balance)
Ø	**Tungsten electrode diameter/Ignition optimisation rotary dial** Infinitely adjustable from 1 mm to 4 mm or greater
%	**Alternating current balance (TIG AC) rotary dial** Max. setting range: - 30% to + 30%
	Alternating current frequency (TIG AC) rotary dial 50 Hz to 200 Hz
	Select welding parameters button This button is used to select the welding parameters depending on the welding process and operating mode used.
	Welding parameter setting rotary transducer Setting flows, times and parameters.

5.8.4 Welding data display

The following welding parameters can be displayed before (nominal values) or during (actual values) welding.

Parameter	Before welding (nominal values)	During welding (actual values)
Welding current	☑	☑
Parameter times	☑	☐
Parameter currents	☑	☐

☐ not possible
☑ possible

5.8.4.1 Welding parameter setting

The parameters that can be set in the function sequence of the machine control depend on the selected welding task. This means that if for example you have not selected a pulse variant, then you cannot set any pulse times in the function sequence.

5.8.5 Arc ignition

The ignition type can be set at the ignition type changeover switch.

- See 5.8.5 Arc ignition chapter

5.8.5.1 HF ignition

The ignition energy can be adjusted, if required.

- See 5.12.7 TIG HF start (soft/hard) switching chapter

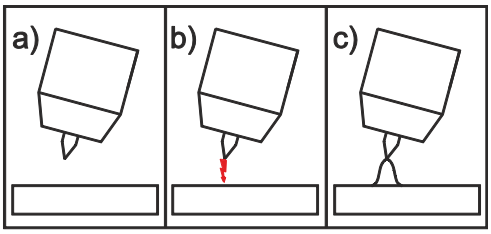

Figure 5-11

The arc is started without contact from high-voltage ignition pulses.

a) Position the welding torch in welding position over the workpiece (distance between the electrode tip and workpiece should be approx. 2-3mm).

b) Press the torch trigger (high voltage ignition pulses ignite the arc).

c) Ignition current flows, and the welding process is continued depending on the operating mode selected.

End the welding process: Release or press the torch trigger depending on the operating mode selected.

5.8.5.2 Liftarc ignition

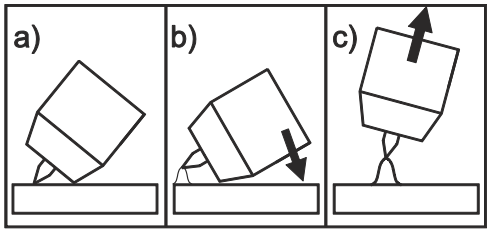

Figure 5-12

The arc is ignited on contact with the workpiece:

a) Carefully place the torch gas nozzle and tungsten electrode tip onto the workpiece and press the torch trigger (liftarc current flowing, regardless of the main current set).

b) Incline the torch over the torch gas nozzle to produce a gap of approx. 2-3 mm between the electrode tip and the workpiece. The arc ignites and the welding current is increased, depending on the operating mode set, to the ignition or main current set.

c) Lift off the torch and swivel to the normal position.

Ending the welding process: Release or press the torch trigger depending on the operating mode selected.

5.8.5.3 Automatic cut-out

☞ ***The automatic cut-out function will be triggered by two conditions during the welding process:***

- ***During the ignition phase (ignition fault) If there is no welding current within 3s after starting the welding.***
- ***During the welding phase (arc interruption) If the arc is interrupted for longer than 3s.***

In both cases, the welding machine ends the ignition or welding process immediately.

5.8.6 Optimising the ignition characteristics for pure tungsten electrodes

The best ignition and stabilisation of the arc (DC, AC) and optimum spherical cup formation in the tungsten electrode depend on the electrode diameter being used.

The set value should correspond to the diameter of the tungsten electrode. The value can of course be adjusted in line with different requirements.

Operating element	Action	Result
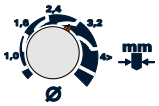		Set diameter of tungsten electrode • Increase parameter value > more ignition power • Reduce parameter value > less ignition power

5.8.7 Optimal and fast spherical cup formation

☞ ***A conically ground tungsten electrode (approx. 35°) is generally required to form an ideal spherical cup.***

Spherical cup formation preset

Operating element	Action	Result
		**Set operating mode** spotArc Activate function spotArc
		**Set pulse welding** Automatic Deactivate TIG automated pulses
		**Set spotArc time** Set spotArc time in line with the electrode diameter in use
		**Select welding current polarity** AC Alternating current welding
		**Set AC balance** • Turn rotary dial to the left as far as it will go (positive) • Form spherical cup on the tungsten electrode • Turn rotary dial back to its original position (positive)

☞
- ***Use a sample workpiece.***
- ***Ignite arc with HF ignition (non-contact) and form required spherical cup for the application in question.***

5.8.8 Function sequences/operating modes

The parameters for the function sequence are set using the “Select welding parameters” button and the “Welding parameter setting” rotary dial.

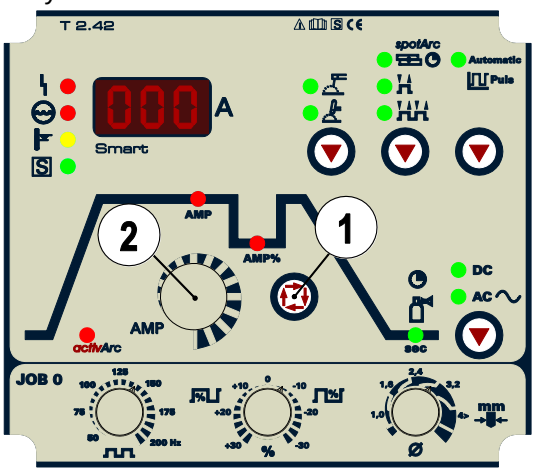

Figure 5-13

Item	Symbol	Description
1		**Select welding parameters button** This button is used to select the welding parameters depending on the welding process and operating mode used.
2		**Welding parameter setting rotary dial** Setting currents, times and parameters.

5.8.8.1 Explanation of symbols

Symbol	Meaning
	Press torch trigger 1
	Release torch trigger 1
I	Current
t	Time
	Gas pre-flows
I_{start}	Ignition current
t_{Up}	Up-slope time
tP	Spot time
AMP	Main current (minimum to maximum current)
AMP%	Secondary current (0% to 100% of AMP)
t1	Pulse time
t2	Pulse pause time
t_{Down}	Down-slope time
I_{end}	End-crater current
	Gas post-flows

5.8.9 TIG runtime parameters

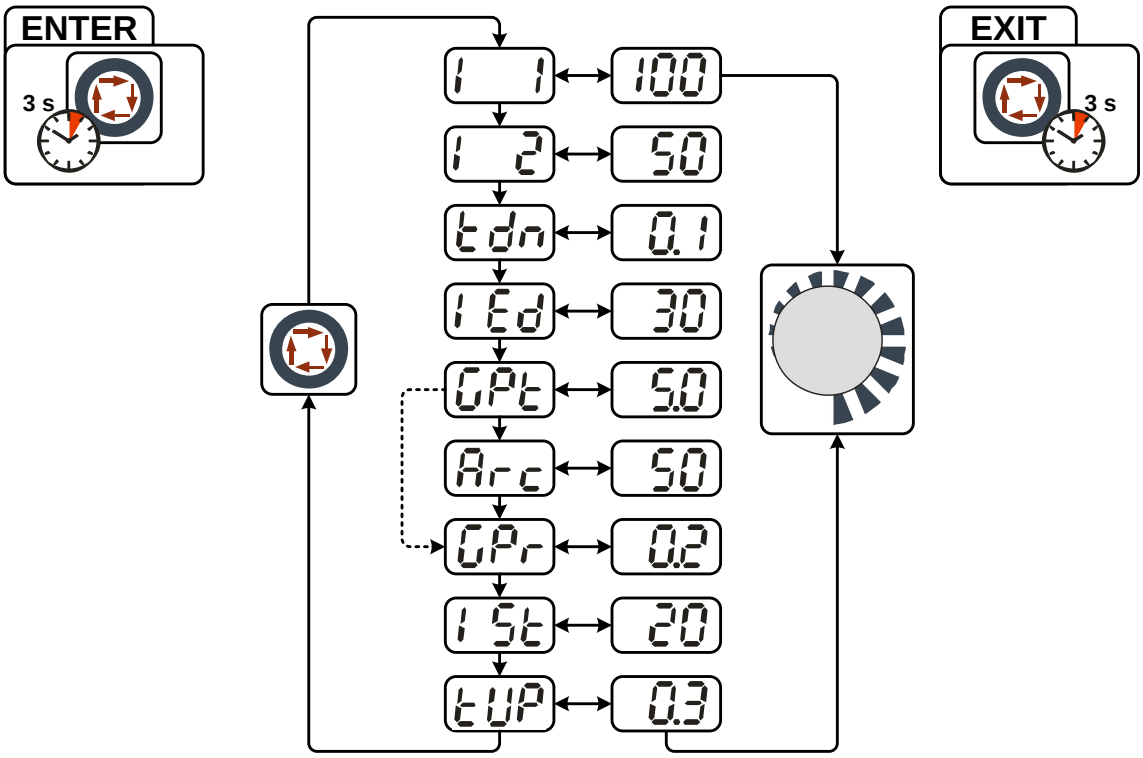

Figure 5-14

Display	Setting/selection
I 1	**Main current I1 (AMP)** Main current setting
I 2	**Secondary current (AMP%)** Setting range in percent: 1% to 100% (depending on main current). Setting range, absolute: Imin to Imax.
tdn	**Downslope time** 0.00 s to 20.0 s (0.1 s increments). The downslope time can be set separately for latched and non-latched operation.
I Ed	**End-crater current** Setting range in percent: depending on main current Setting range, absolute: Imin to Imax.
GPt	**Gas post-flow time** Setting range: 0.1 s to 20.0 s (0.1 s increments).
Arc	**activArc parameter** Parameter can also be set after activating TIG activArc welding.
GPr	**Gas pre-flow time** Setting range: 0.1 s to 5.0 s (0.1 s increments)
I St	**Ignition current** Setting range in percent: depending on main current Setting range, absolute: Imin to Imax.
tUP	**Upslope time to main current** Setting: 0.0 sec. to 20.0 sec. (factory setting 1.0 sec.)

5.8.9.1 Non-latched mode

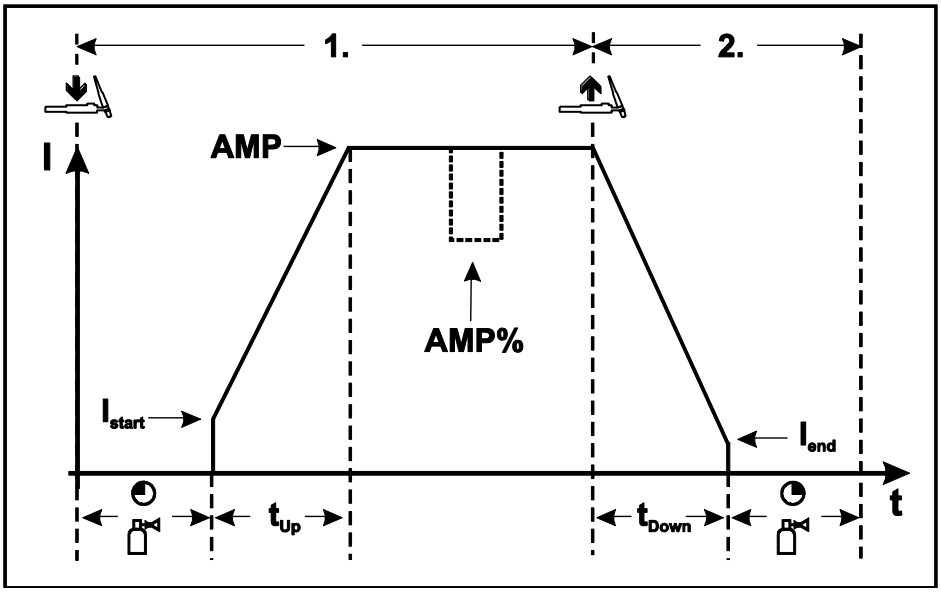

Figure 5-15

1st cycle:

- Press and hold torch trigger 1.
- The gas pre-flow time elapses.
- HF ignition pulses jump from the electrode to the workpiece, the arc ignites.
- The welding current flows and immediately assumes the value set for the ignition current I_{start}.
- HF is switched off.
- The welding current increases with the adjusted up-slope time to the main current AMP.

Switching from main current AMP to secondary current AMP%:
Press torch trigger 2 or Tap torch trigger 1

2nd cycle:

- Release torch trigger 1.
- The main current falls in the set down-slope time to the end-crater current I_{end} (minimum current).

If the 1st torch trigger is pressed during the down-slope time, the welding current returns to the main current AMP set.

- The main current reaches the end-crater current I_{end}, the arc extinguishes.
- The set gas post-flow time elapses.

☞ ***When the foot-operated remote control RTF is connected, the machine switches automatically to non-latched operation.***
The up- and down-slopes are switched off.

5.8.9.2 Latched mode

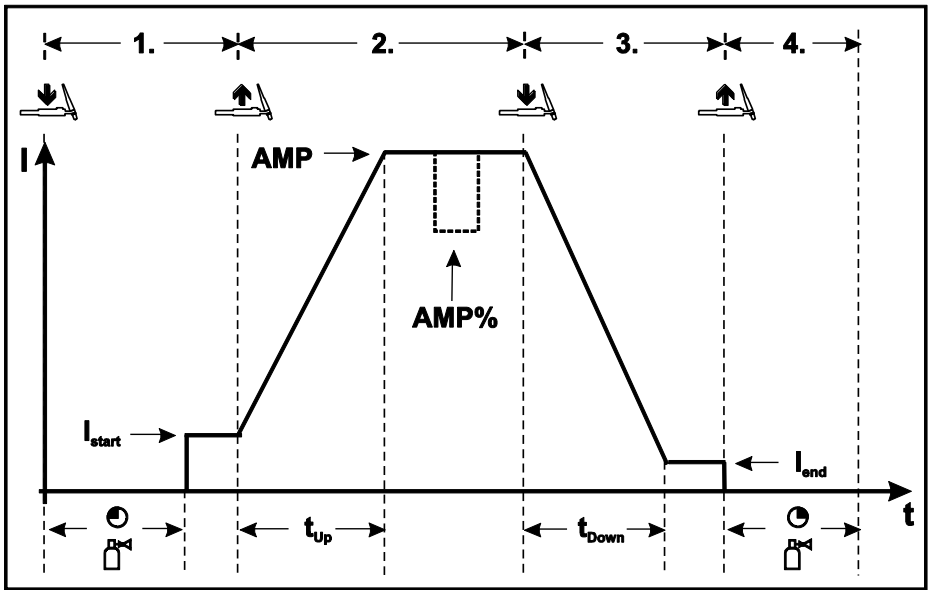

Figure 5-16

Step 1

- Press torch trigger 1, the gas pre-flow time elapses.
- HF ignition pulses jump from the electrode to the workpiece, the arc ignites.
- Welding current flows and immediately assumes the ignition current value set (search arc at minimum setting). HF is switched off.

Step 2

- Release torch trigger 1.
- The welding current increases with the set up-slope time to the main current AMP.

Switching from main current AMP to secondary current AMP%:
Press torch trigger 2 or Tap torch trigger 1

Step 3

- Press torch trigger 1.
- The main current drops with the set down-slope time to the end-crater current I_{end} (minimum current).

Step 4

- Release torch trigger 1, the arc extinguishes.
- The set gas post-flow time begins.

Immediate termination of the welding process in the downslope by releasing torch trigger 1.

☞ ***When the foot-operated remote control RTF is connected, the machine switches automatically to non-latched operation.***
The up- and down-slopes are switched off.

☞ ***To use the alternative welding start (tapping start) a double-digit torch mode (11-x) has to be set at the welding machine control. The number of torch modes available depends on the machine type. For single-digit torch modes (1-x) this function is disabled.***

5.8.9.3 spotArc

This process is suitable for tack welding or joint welding of metal sheets made from steel and CrNi alloys up to a thickness of approximately 2.5 mm. Metal sheets of different thicknesses can also be welded on top of one another.

The spot welding operating modes (spotArc/Spotmatic) can be used with two different intervals, i.e. a "long" or "short" interval, which are defined as follows:

Interval	Setting range	Up-/down-slope	Pulsing	AC	Display
Long	0.01–20.0 s (10 ms)	Yes	Yes	Yes	StL
Short	5–999 ms (1 ms)	No	No	No	StS

When selecting the spotArc operating mode, the long interval is automatically preselected. When selecting the Spotmatic operating mode, the short interval is automatically preselected. The user can change the interval in the Configuration menu- See 5.12.10 spotarc / Spotmatic configuration chapter.

Selecting and setting TIG spotArc

Operating element	Action	Result
spotArc		Signal light spotArc comes on The spot time can be set for approx. 4 s using the "Welding parameter setting" rotary dial (spot time setting range 0.01 s to 20.0 s)
		Set spot time "tP"
Pulse Auto.		The „TIG automated pulses“ pulse variant is switched on ex works together with the TIG spotArc process. **Automatic** TIG automated pulses (frequency and balance)

☞ ***The up-slope and down-slope times should be set to “0” to achieve an effective result.***

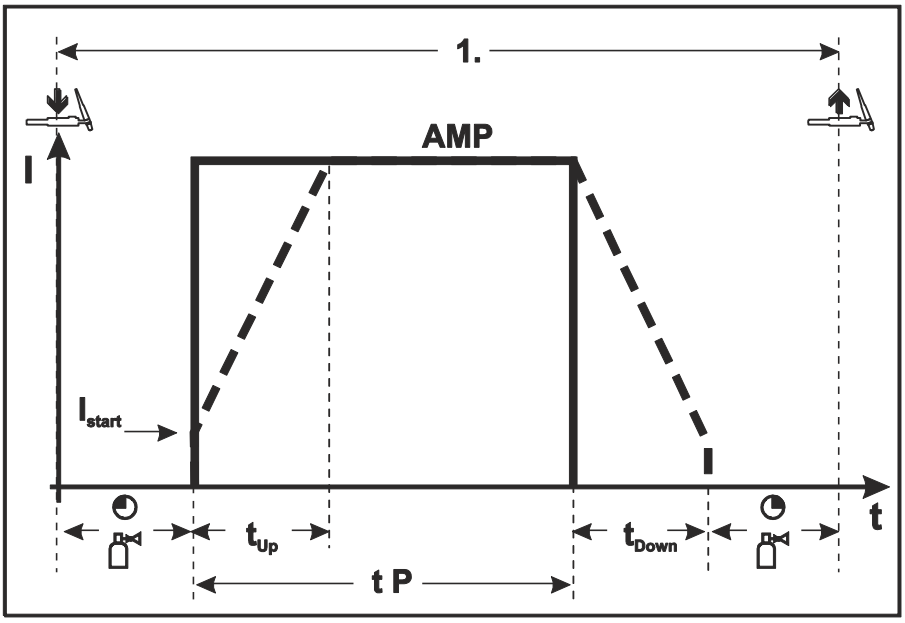

Figure 5-17

As an example the process is shown with HF ignition. Arc ignition with lift arc is also possible, however- See 5.8.5 Arc ignition chapter.

Sequence:

- Press and hold torch trigger 1.
- The gas pre-flow time elapses.
- HF ignition pulses jump from the electrode to the workpiece, the arc ignites.
- The welding current flows and immediately assumes the value set for the ignition current I_{start}.
- HF is switched off.
- The welding current increases in the adjusted up-slope time to the main current AMP.

☞ ***The process ends when the set spotArc time elapses or if the torch trigger is released prematurely.***

5.8.9.4 Spotmatic

☞ ***This function must be enabled before use- See 5.12 Machine configuration menu chapter.***

In contrast to the spotarc operating mode, the arc ignites not by pressing the torch trigger as is usual, but by shortly touching the tungsten electrode against the workpiece. The torch trigger is used for process activation. The process can be activated separately for each spot or permanently- See 5.12 Machine configuration menu chapter:

- Separate process activation:
  The welding process has to be reactivated for every arc ignition by pressing the torch trigger.
- Permanent process activation:
  The welding process is activated by pressing the torch trigger once. The following arc ignitions are initiated by shortly touching the tungsten electrode against the workpiece.

☞ ***Selection and adjustment are made in the same way as with spotArc operating mode- See 5.8.9.3 spotArc chapter.***

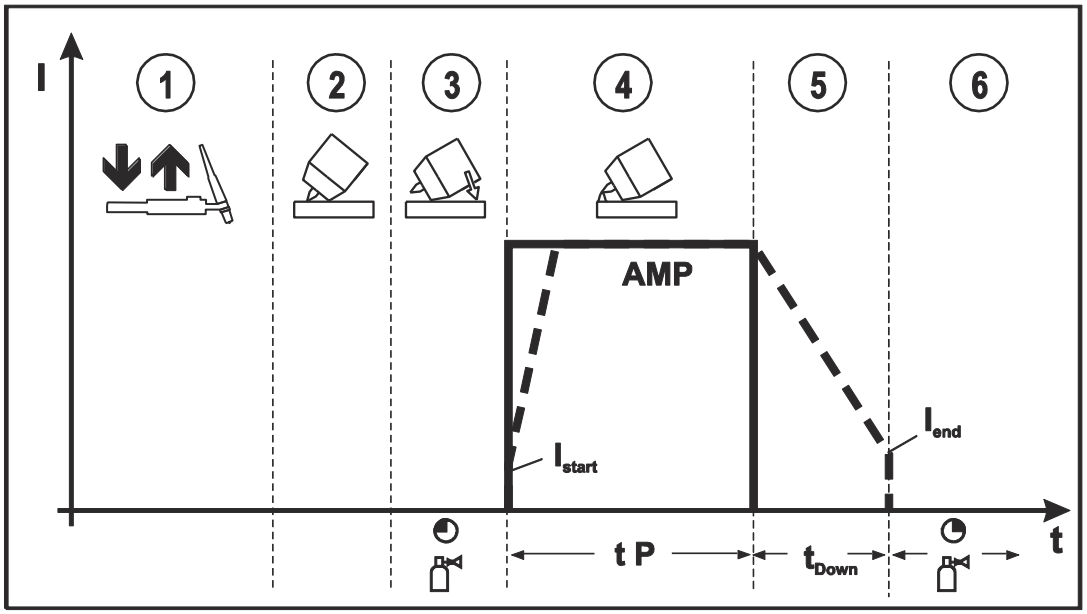

Figure 5-18

As an example the process is shown with HF ignition. Arc ignition with lift arc is also possible, however- See 5.8.5 Arc ignition chapter.

Select the process activation type- See 5.12 Machine configuration menu chapter.

Up- and down-slope times possible for long setting range of the spot time (0.01 s - 20.0 s) only.

① Press and release torch trigger (tap) to activate the welding process.

② Touch the torch gas nozzle and tungsten electrode tip carefully against the workpiece.

③ Incline the torch over the torch gas nozzle until there is a gap of approx. 2-3 mm between the electrode tip and the workpiece. Shielding gas flows in the set gas pre-flow time. The arc ignites and the previously set ignition current (I_{start}) flows.

④ The main current phase ends when the set spotArc time expires.

⑤ The welding current drops in the set down-slope time to the end current (I_{end}).

⑥ The gas post-flow time expires and the welding process ends.

Press and release torch trigger (tap) to reactivate the welding process (only for separate process activation). Touching the torch with the tungsten electrode tip again against the workpiece will initiate the next welding processes.

5.8.10 Pulses, function sequences

5.8.10.1 Automated pulses

The automated pulses are used with tacking and spot welding of workpieces in particular.
An oscillation in the molten pool is produced by the current-dependent pulse frequency and balance, which positively influences the ability to bridge the air gap. The pulse parameters required are automatically specified by the machine control.

Operating element	Action	Result
Automatic Pulse		**Select TIG automated pulses** Press the "TIG pulses" button until the TIG automated pulses signal light **Automatic** comes on

5.8.11 TIG activArc welding

The EWM activArc process, thanks to the highly dynamic controller system, ensures that the power supplied is kept virtually constant in the event of changes in the distance between the welding torch and the weld pool, e.g. during manual welding. Voltage losses as a result of a shortening of the distance between the torch and molten pool are compensated by a current rise (ampere per volt - A/V), and vice versa. This helps prevents the tungsten electrode sticking in the molten pool and the tungsten inclusions are reduced. This is particularly useful in tacking and in spot welding.

Operating element	Action	Result	Display
	n x	Select activArc parameter Press until **activArc** LED flashes	-
		• Switch parameter on	on
		• Switch parameter off	oFF

Parameter setting

The activArc parameter (control) can be adjusted specifically for the welding task (panel thickness).

- Preset with: TIG activArc welding
- Enter the menu (ENTER) Keep the runtime parameter button pressed for 3 s.
- Leave the menu (EXIT) Keep the runtime parameter button pressed for 3 s.

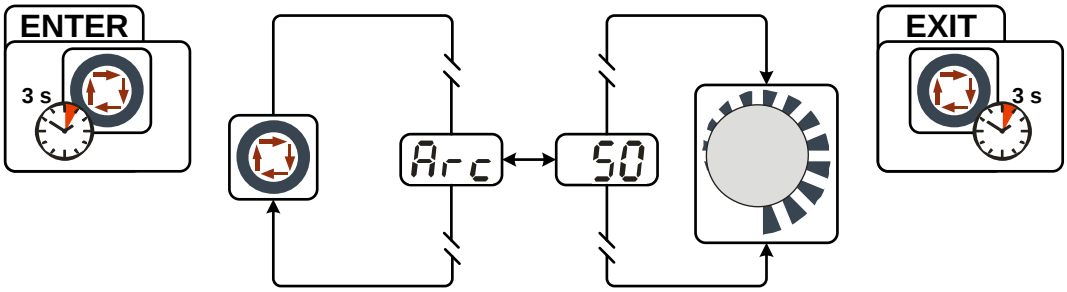

Figure 5-19

Display	Setting/selection
Arc	**activArc parameter** Parameter can also be set after activating TIG activArc welding.

5.8.12 Welding torch (operating variants)

Different torch versions can be used with this machine.

Functions on the operating elements, such as torch triggers (TT), rockers or potentiometers, can be modified individually via torch modes.

Explanation of symbols for operating elements:

Symbol	Description
BRT 1 ⇩	Press torch trigger
BRT 1 ⇩⇧	Tap torch trigger
BRT 2 ⇩⇧ ⇩	Tap and press torch trigger

5.8.12.1 Tap torch trigger (tapping function)

☞ ***Swiftly tap the torch trigger to change the function.***
The torch mode set determines the operating mode of the tapping function.

5.8.13 Torch mode and up/down speed setting

The user has the modes 1 to 4 and modes 11 to 14 available. Modes 11 to 14 include the same function options as 1 to 4, but without tapping function for the secondary current.

The function options in the individual modes can be found in the tables for the corresponding torch types.

The welding process can of course be switched on and off in all modes using torch trigger 1 (TT 1).

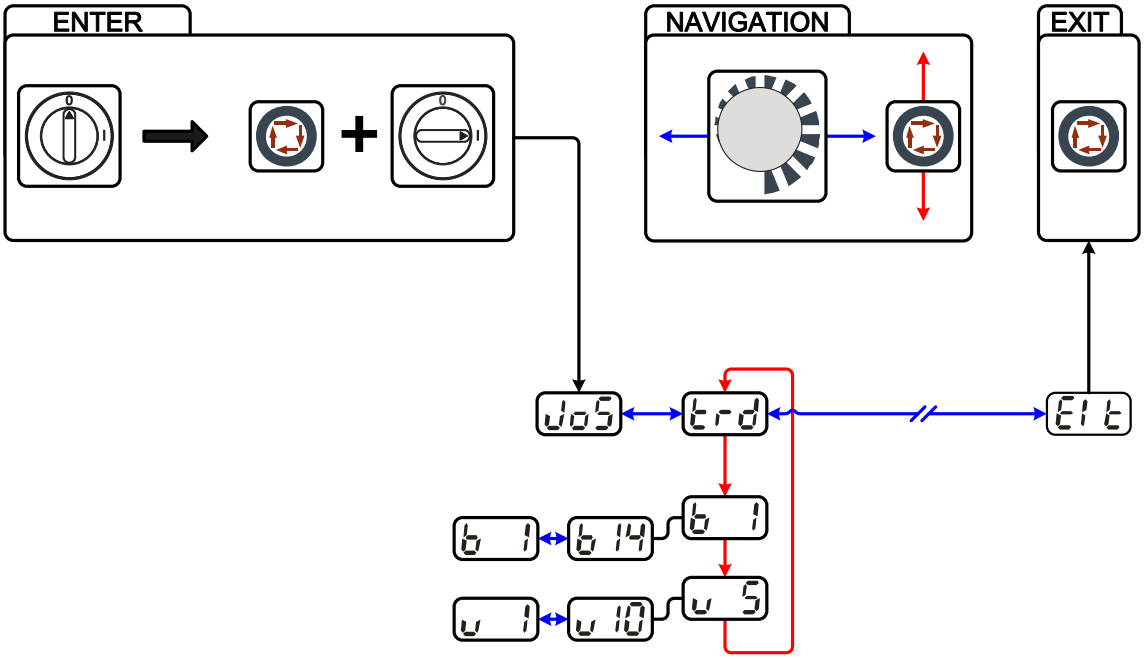

Figure 5-20

Display	Setting/selection
JoS	**Lock JOB menu** Protect welding parameters from unauthorised access.
trd	**Torch configuration menu** Set welding torch functions
b 1	**Torch mode setting (factory setting 1)**
u 5	**Up-/Down speed (not available in modes 4 and 14)** Increase value = rapid current change Reduce value = slow current change
Elt	**Exit the menu** Exit

☞ ***Only the modes listed are suitable for the corresponding torch types.***

5.8.13.1 Standard TIG torch (5-pole)

Standard torch with one torch trigger:

Diagram	Operating elements	Explanation of symbols
	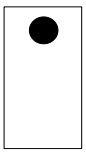	BRT1 = Torch trigger 1 (welding current on/off; secondary current via tapping function)

Functions	mode	Operating elements
Welding current On/Off	1 (factory-set)	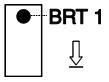
Secondary current (Latched mode)		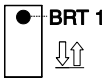

Standard torch with two torch triggers:

Diagram	Operating elements	Explanation of symbols
	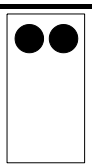	BRT1 = torch trigger 1 BRT2 = torch trigger 2

Functions	mode	Operating elements
Welding current On/Off	1 (factory-set)	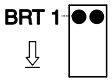
Secondary current		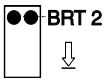
Secondary current (tapping mode) / (latched mode)		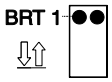
Welding current On/Off	3	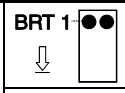
Secondary current (tapping mode) / (latched mode)		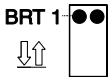
Up function		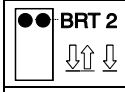
Down function		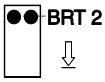

Standard torch with one rocker (MG rocker, two torch triggers)

Diagram	Operating elements	Explanation of symbols
	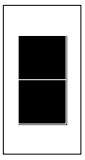	BRT 1 = torch trigger 1 BRT 2 = torch trigger 2

Functions	mode	Operating elements
Welding current On/Off	1 (factory-set)	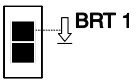
Secondary current		
Secondary current (tapping mode) / (latched mode)		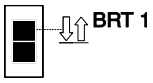
Welding current On/Off	2	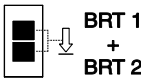
Secondary current (tapping mode)		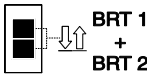
Up function		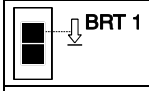
Down function		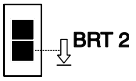
Welding current On/Off	3	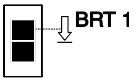
Secondary current (tapping mode) / (latched mode)		
Up function		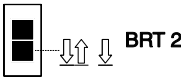
Down function		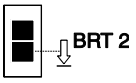

5.8.13.2 TIG up/down torch (8-pole)

Up/down torch with one torch trigger

Diagram	Operating elements	Explanation of symbols
	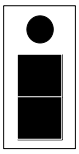	TT 1 = torch trigger 1

Functions	Mode	Operating elements
Welding current on/off	1 (factory-set)	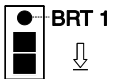
Secondary current (tapping mode) / (Latched mode)		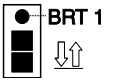
Increase welding current, infinite adjustment (up function)		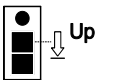
Reduce welding current, infinite adjustment (down function)		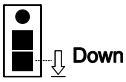
Welding current on/off	2	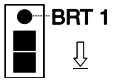
Secondary current (tapping mode)		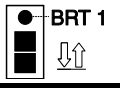
Welding current on/off	4	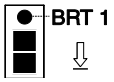
Secondary current (tapping mode) / (Latched mode)		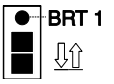

Up/down torch with two torch triggers

Diagram	Operating elements	Explanation of symbols
	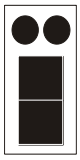	TT 1 = torch trigger 1 (left) TT 2 = torch trigger 2 (right)

Functions	Mode	Operating elements
Welding current on/off	1 (factory-set)	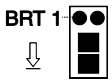
Secondary current		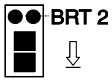
Secondary current (tapping mode) / (Latched mode)		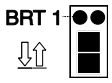
Increase welding current, infinite adjustment (up function)		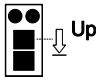
Reduce welding current, infinite adjustment (down function)		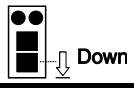
Welding current on/off	2	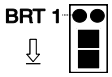
Secondary current		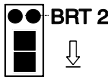
Secondary current (tapping mode)		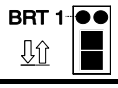
Welding current on/off	4	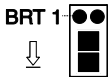
Secondary current		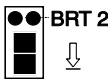
Secondary current (tapping mode)		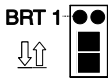

5.8.13.3 Potentiometer torch (8-pole)

☞ ***The welding machine needs to be configured for operation with a potentiometer torch- See 5.8.13.4 Configuring the TIG potentiometer torch connection chapter.***

Potentiometer torch with one torch trigger:

Diagram	Operating elements	Explanation of symbols
		BRT 1 = torch trigger 1

Functions	Mode	Operating elements
Welding current On/Off	3	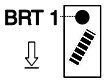
Secondary current (tapping mode)		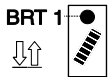
Increase welding current, infinite adjustment		
Reduce welding current, infinite adjustment		

Potentiometer torch with two torch triggers:

Diagram	Operating elements	Explanation of symbols
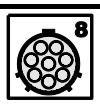		BRT 1 = torch trigger 1 BRT 2 = torch trigger 2

Functions	Mode	Operating elements
Welding current On/Off	3	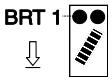
Secondary current		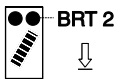
Secondary current (tapping mode)		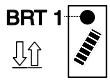
Increase welding current, infinite adjustment		
Reduce welding current, infinite adjustment		

5.8.13.4 Configuring the TIG potentiometer torch connection

DANGER

Do not carry out any unauthorised repairs or modifications!
To avoid injury and equipment damage, the unit must only be repaired or modified by specialist, skilled persons!
The warranty becomes null and void in the event of unauthorised interference.

- Appoint only skilled persons for repair work (trained service personnel)!

Risk of injury due to electrical voltage after switching off!
Working on an open machine can lead to fatal injuries!
Capacitors are loaded with electrical voltage during operation. Voltage remains present for up to four minutes after the mains plug is removed.

1. Switch off machine.
2. Remove the mains plug.
3. Wait for at last 4 minutes until the capacitors have discharged!

CAUTION

Test!
Before re-commissioning, it is essential that an "inspection and test during operation" is carried out conforming to IEC / DIN EN 60974-4 "Arc welding devices - inspection and testing during operation"!

- For detailed instructions, please see the standard operating instructions for the welding machine.

When connecting a potentiometer torch, jumper JP1 on PCB T200/1 inside the welding machine should be unplugged.

Welding torch configuration	Setting
Prepared for TIG standard or up/down torch (factory setting)	☒ JP1
Prepared for potentiometer torches	☐ JP1

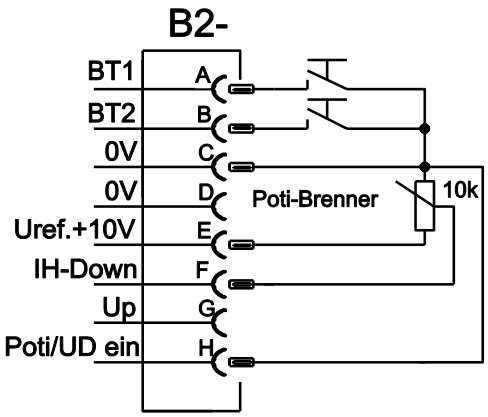

Figure 5-21

☞ ***For this torch type the welding machine has to be set to torch mode 3- See 5.8.13 Torch mode and up/down speed setting chapter.***

5.9 MMA welding

CAUTION

Risk of being crushed or burnt.
When replacing spent or new stick electrodes

- Switch off machine at the main switch
- Wear appropriate safety gloves
- Use insulated tongs to remove spent stick electrodes or to move welded workpieces and
- Always put the electrode holder down on an insulated surface.

Shielding gas connection!
During MMA welding open circuit voltage is applied at the shielding gas connection (G¼" connecting nipple).

- Place yellow insulating cap on the G¼" connection nipple (protects against electrical voltage and dirt).

5.9.1 Connecting the electrode holder and workpiece lead

☞ ***Polarity depends on the instructions from the electrode manufacturer given on the electrode packaging.***

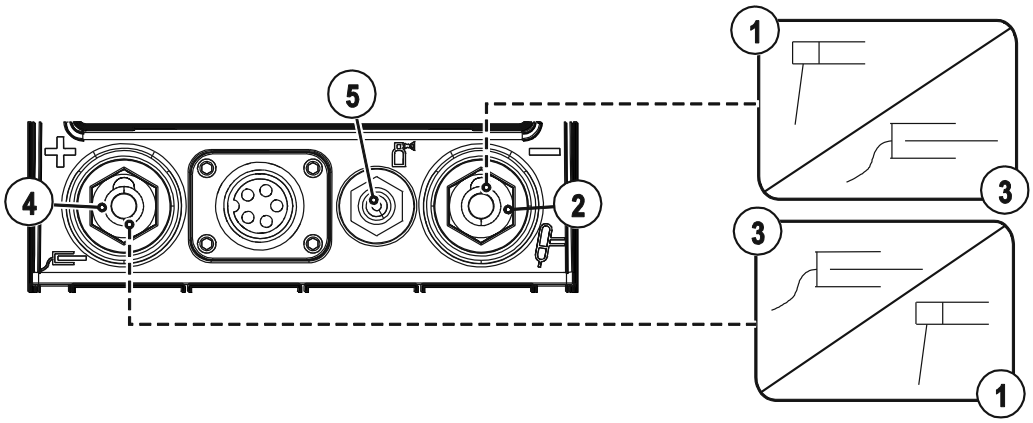

Figure 5-22

Item	Symbol	Description
1		**Electrode holder**
2		**Connection socket, “-” welding current** Workpiece lead or electrode holder connection
3		**Workpiece**
4		**Connection socket for "+" welding current** Electrode holder or workpiece lead connection
5		**Connecting nipple G¼, shielding gas connection**

- Fit yellow protective cap onto G¼" connecting nipple.
- Insert cable plug of the electrode holder into either the "+" or "-" welding current connection socket and lock by turning to the right.
- Insert cable plug of the workpiece lead into either the "+" or "-" welding current connection socket and lock by turning to the right.

5.9.2 Select welding task

Operating element	Action	Result
		Select MMA welding process The signal light lights up in green
		Set welding current

5.9.3 Hotstart current and Hotstart time

The hotstart device improves the ignition of the stick electrodes using an increased ignition current.

a) = Hotstart time
b) = Hotstart current
I = Welding current
t = Time

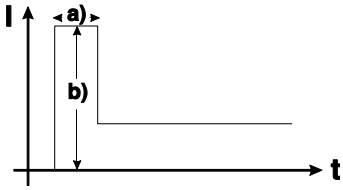

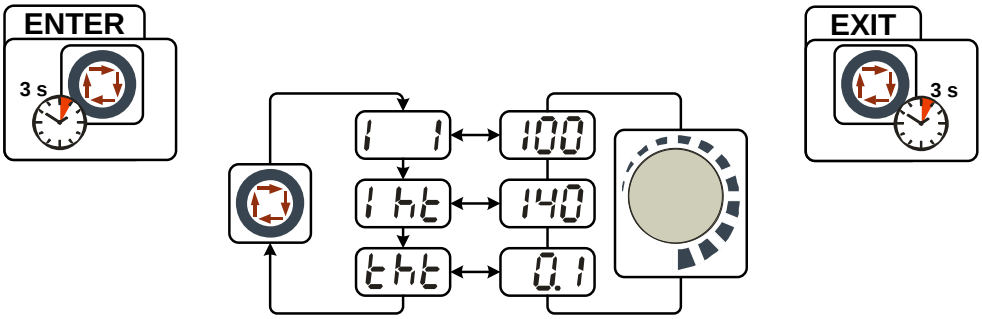

Figure 5-23

Display	Setting/selection
I 1	**Main current I1 (AMP)** Main current setting
I ht	**Hotstart current** Hotstart current setting
t ht	**Hotstart time** Hotstart time setting

5.9.4 Antistick

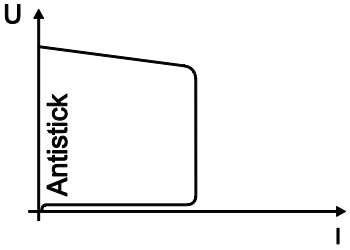

Anti-stick prevents the electrode from annealing.
If the electrode sticks in spite of the Arcforce device, the machine automatically switches over to the minimum current within about 1 second to prevent the electrode from overheating. Check the welding current setting and correct according to the welding task!

5.9.4.1 MMA pulsed welding

Welding characteristics:

- Especially suitable for root welding
- Fine-flaked weld surface with a TIG look for final passes
- Less finishing work thanks to less spatter
- Highly suitable for difficult electrodes
- Outstanding gap bridging with no sagging of the root side
- Less distortion thanks to controlled heat input

Operating element	Action	Result
Automatic Puls		Press the push-button until the signal light illuminates in green.
		Current average value selection AMP and AMP% signal lights illuminated Setting range: Imin to Imax.
	3 s	Balance selection (bAL)
	3 s	Frequency selection (FrE)
	3 s	Pulse current parameter selection IPL (Expert menu) As a percentage of the current average value Setting range: 100% to 200% (increments of 1%, 142% ex works)

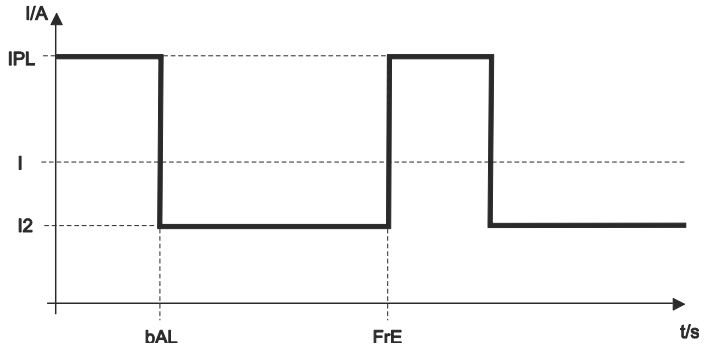

IPL = pulse current
I = current average value
I2 = pulse pause current
FrE = frequency
bAL = duty cycle

Figure 5-24

☞ ***The pulse pause current (12) is automatically assigned and cannot be changed by the user.***

5.10 Remote control

☞ ***The remote controls are operated on the 19-pole remote control connection socket (analogue).***

5.10.1 Manual remote control RT1 19POL

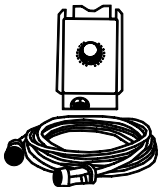

Functions

- Infinitely adjustable welding current (0% to 100%) depending on the preselected main current on the welding machine.

5.10.2 RTG1 19POL manual remote control

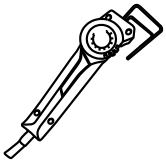

Functions

- Infinite setting of the welding current (0% to 100%) depending on the main current preselected at the welding machine

5.10.3 Manual remote control RTP1 19POL

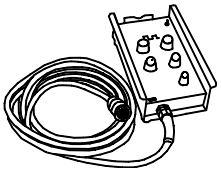

Functions

- TIG/MMA
- Infinitely adjustable welding current (0% to 100%) depending on the preselected main current on the welding machine.
- Pulse/spot/normal
- Pulse, spot and break times are infinitely adjustable.

5.10.4 Manual remote control RTP2 19POL

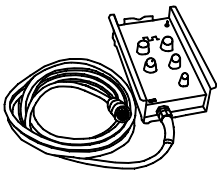

Functions

- TIG/MMA.
- Infinitely adjustable welding current (0% to 100%) depending on the preselected main current on the welding machine.
- Pulse/spot/normal
- Frequency and spot times infinitely adjustable.
- Coarse adjustment of the cycle frequency.
- Pulse/pause ratio (balance) adjustable from 10% to 90%.

5.10.5 RTP3 spotArc 19POL manual remote control

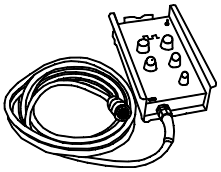

Functions

- TIG / MMA.
- Infinitely adjustable welding current (0% to 100%) depending on the preselected main current on the welding machine.
- Pulse / SpotArc spots / normal
- Frequency and spot time infinitely adjustable.
- Coarse adjustment of the pulse frequency.
- Pulse/pause ratio (balance) adjustable from 10% to 90%.

5.10.6 Foot-operated remote control RTF1 19POL 5 M / RTF2 19POL 5 M

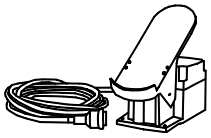

Functions

- Infinitely adjustable welding current (0% to 100%) depending on the preselected main current on the welding machine.
- Start/stop welding operation (TIG)

ActivArc welding is not possible in combination with the foot-operated remote control.

5.11 Interfaces for automation

5.11.1 Remote control connection socket, 19-pole

CAUTION

Damage to the machine due to improper connection!
Unsuitable control leads or incorrect connection of input and output signals can cause damage to the machine.

- Only use shielded control leads!
- If the machine is to be operated with control voltages connection via suitable isolation amplifiers is required!
- To control the main or secondary current via control voltages, the relevant inputs must be enabled (see specification for activation of control voltage).

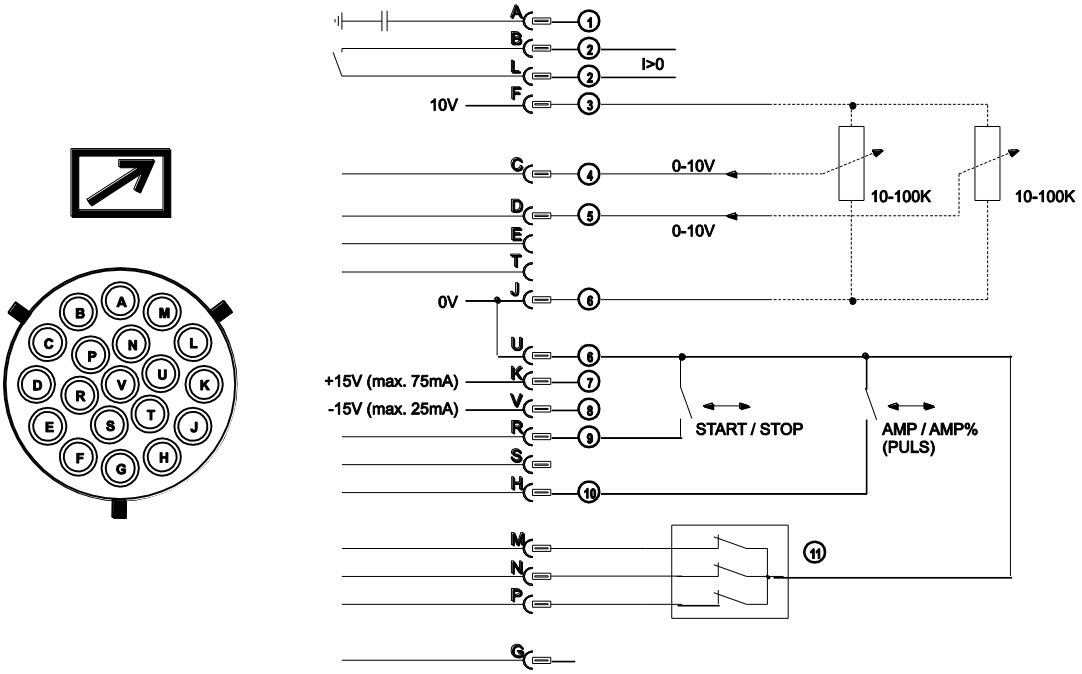

Figure 5-25

Item	Pin	Signal shape	Designation
1	A	Output	Connection for cable screen (PE)
2	B/L	Output	Current flowing signal I>0, galvanically isolated (max. +- 15V/100mA)
3	F	Output	Reference voltage for potentiometer 10V (max. 10mA)
4	C	Input	Control voltage specification for main current, 0–10V (0V = I_{min}/10V = I_{max})
5	D	Input	Control voltage specification for secondary current, 0–10V (0V = I_{min}/10V = I_{max})
6	J/U	Output	Reference potential 0V
7	K	Output	Power supply +15V, max. 75mA
8	V	Output	Power supply -15V, max. 25mA
9	R	Input	Start/Stop welding current
10	H	Input	Switching between main and secondary welding currents (pulses)
11	M/N	Input	Activation of control voltage specification Signals M and N must be set to reference potential 0V to activate the external control voltage specification for main and secondary current.

5.12 Machine configuration menu

The machine menu includes basic functions such as torch modes, display settings and the service menu.

5.12.1 Selecting, changing and saving parameters

☞ ***ENTER (enter the menu)***

- ***Switch off machine at the main switch***
- ***Press and hold the "welding parameters" button and switch the machine on again at the same time.***

NAVIGATION (navigating in the menu)

- ***Parameters are selected by pressing the "welding parameters" button.***
- ***Set or change the parameters by turning the "welding parameter setting" rotary dial.***

EXIT (leave the menu)

- ***Select the "Elt" menu item.***
- ***Press the "welding parameters" button (settings will be applied, machine changes to the ready-to-operate status).***

5.12.2 Power-saving mode (Standby)

The power-saving function can be activated either by pressing the button for a longer time - See 4.3 Machine control – Operating elements chapter or by setting a parameter in the configuration menu (time-based power-saving mode).

When power-saving mode is activated, both machine displays show the horizontal digit in the centre of the display only.

Pressing any operating element (e.g. tapping the torch trigger) deactivates power-saving mode and the machine is ready for welding again.

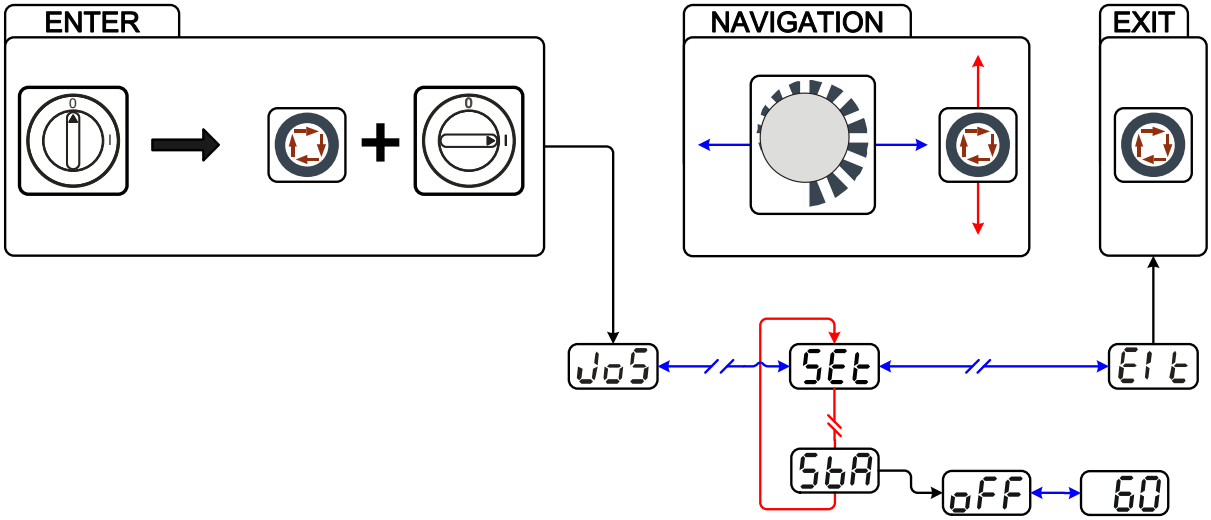

Figure 5-26

Display	Setting/selection
JoS	**Lock JOB menu** Protect welding parameters from unauthorised access.
SEt	**Settings** Settings for machine functions and parameter displays.
SbA	**Time-based power-saving mode** • 5 min.–60 min. = Time to activation of power-saving mode in case of inactivity. • off = inactivated (ex works)
Elt	**Exit the menu** Exit

5.12.3 Testing the machine fan

The machine fan can be switched on at the machine controls so that you can check that it is working correctly.

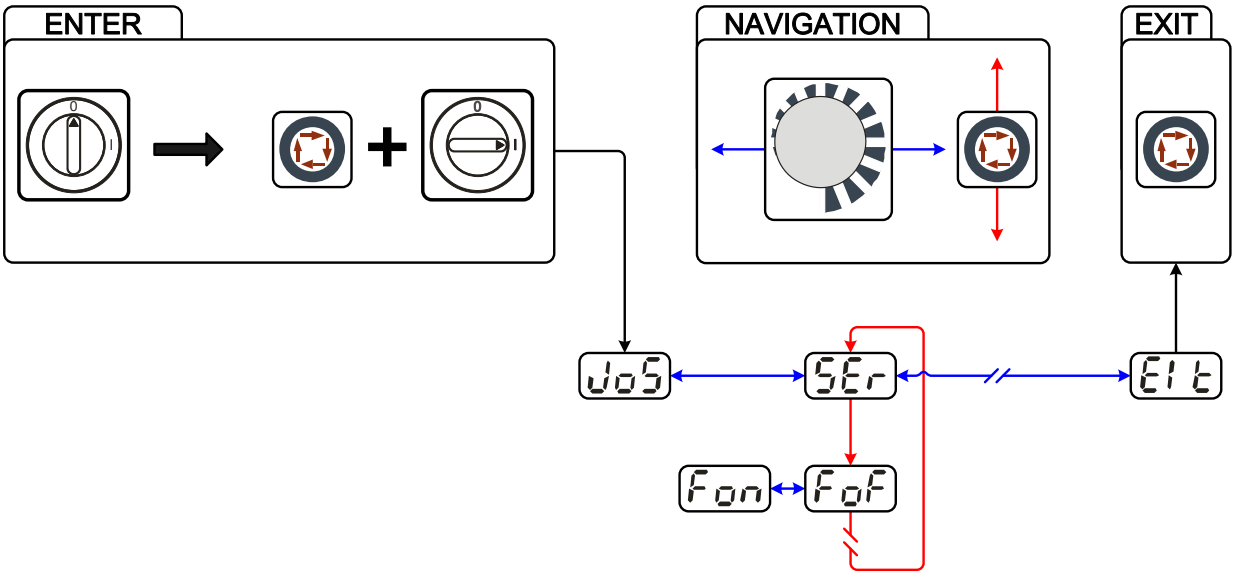

Figure 5-27

Display	Setting/selection
JoS	**Lock JOB menu** Protect welding parameters from unauthorised access.
SEr	**Service menu** Service settings
Elt	**Exit the menu** Exit
FoF	**Machine fan test** Machine fan is switched off
Fon	**Machine fan test** Machine fan is switched on

5.12.4 Limiting the mains current (10A)

If the plug socket has a 10A mains fuse in order to comply with national regulations, it may be necessary to reduce the mains current of the welding machine to 10A in order to avoid triggering the fuse. This restricts the welding machine's power input. The maximum welding performance cannot be achieved when the current is limited to 10A.

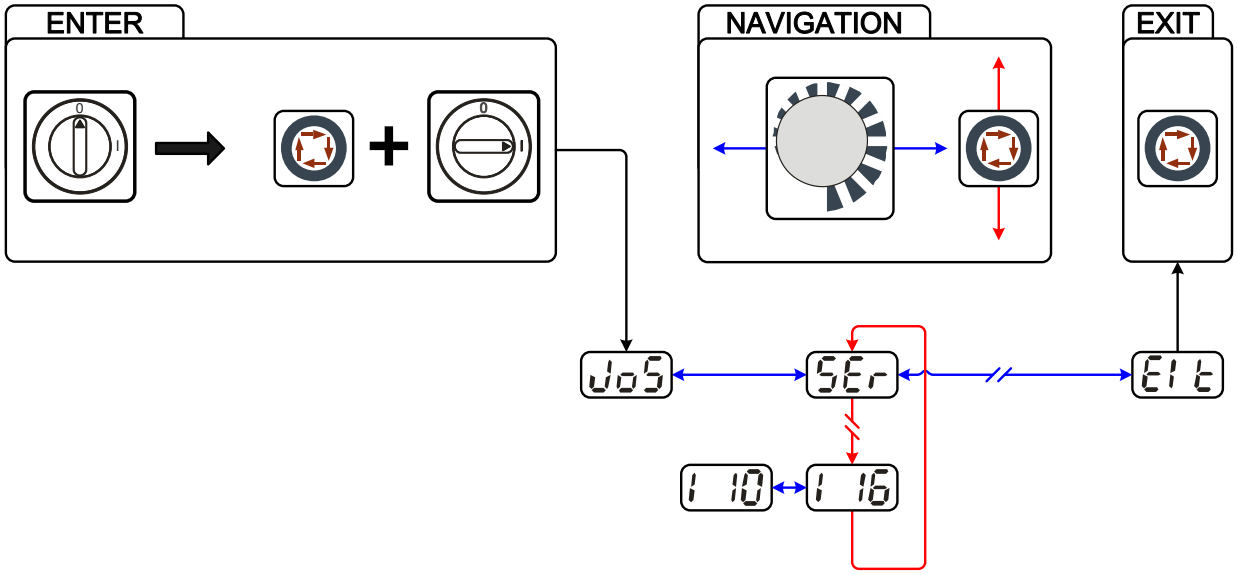

Figure 5-28

Display	Setting/selection
JoS	**Lock JOB menu** Protect welding parameters from unauthorised access.
SEr	**Service menu** Service settings
EIt	**Exit the menu** Exit
I 16	**Mains current limit** Mains current limited to 16A
I 10	**Mains current limit** Mains current limited to 10A

5.12.5 Protecting welding parameters from unauthorised access

To protect against unauthorised or unintentional changes to the welding parameters, you can lock the machine controls with a software key (3-digit machine code).

If the access lock is active, only the following parameters can be changed:

- Welding current (within a previously defined range).

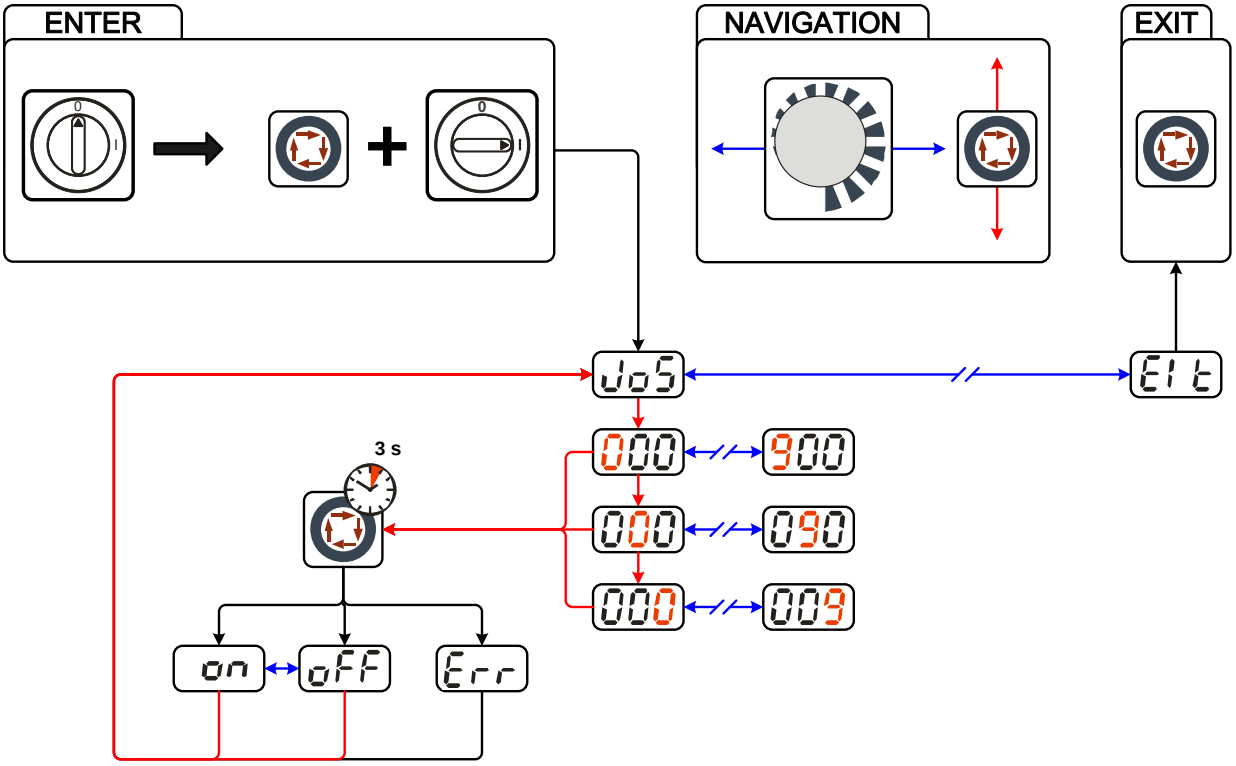

Figure 5-29

Display	Setting/selection
JoS	**Lock JOB menu** Protect welding parameters from unauthorised access.
Elt	**Exit the menu** Exit
Err	**Error** Error message after entering an incorrect machine code
000	**Machine code** Querying the three-digit machine code (000 to 999), user input
oFF	**Switch off** Switching off machine function
on	**Switch on** Switching on machine function

5.12.5.1 Changing the three-digit machine code

In this menu you can change the 3-digit machine code.
After entering and confirming the old code, you can enter a new code.
The correct machine code is necessary for activating and deactivating the access lock!

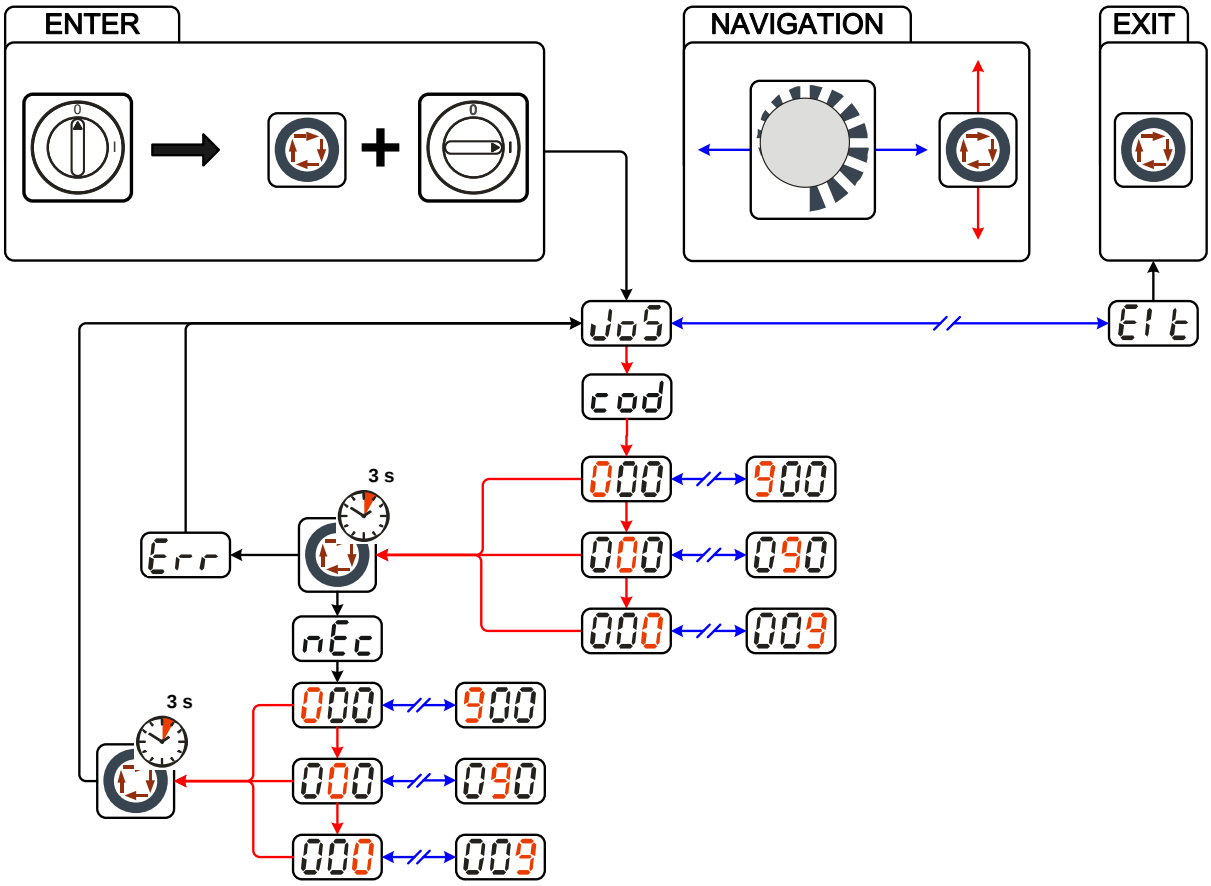

Figure 5-30

Display	Setting/selection
JoS	**Lock JOB menu** Protect welding parameters from unauthorised access.
cod	**Machine code** Confirming the old machine code/entering the new machine code
000	**Machine code** Querying the three-digit machine code (000 to 999), user input
Err	**Error** Error message after entering an incorrect machine code
nEc	**New machine code** • Machine code entered correctly • Prompt for entering the new machine code
EIt	**Exit the menu** Exit

5.12.6 Setting the welding current (absolute/percentage)

The welding currents for start current, secondary current, end current and hotstart current can be set as percentages (factory setting) or absolute values.

If absolute current display is set, the "AMP" signal light for the main current is lit in addition to the respective "AMP%" signal light. However, in percentage display mode, only the respective "AMP%" signal light is lit.

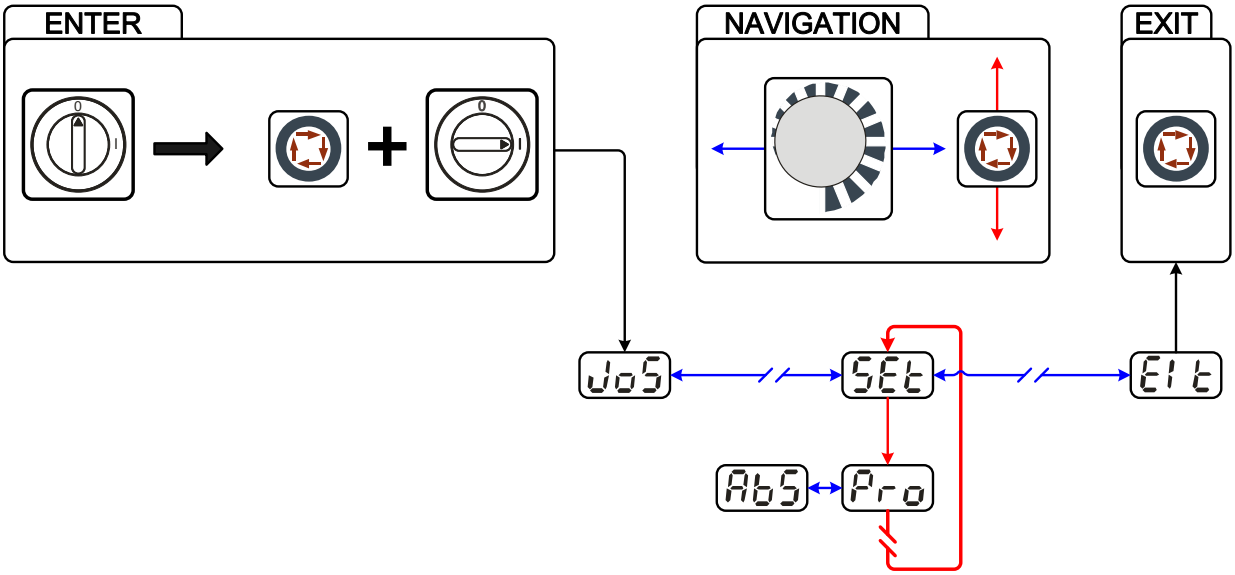

Figure 5-31

Display	Setting/selection
JoS	**Lock JOB menu** Protect welding parameters from unauthorised access.
SEt	**Settings** Settings for machine functions and parameter displays.
Pro	**Welding current display, percentage** Representation of the welding current as a percentage in relation to the main current setting (AMP). Example: Main current setting to 120A and secondary current to 50% results in an absolute secondary current of 60A.
AbS	**Welding current display, absolute** Absolute representation of all welding currents in amperes
EIt	**Exit the menu** Exit

5.12.7 TIG HF start (soft/hard) switching

These parameters are used to switch the ignition energy from soft (low ignition energy) to hard (high ignition energy). The low ignition energy setting is especially suited for ignition on very thin panels.

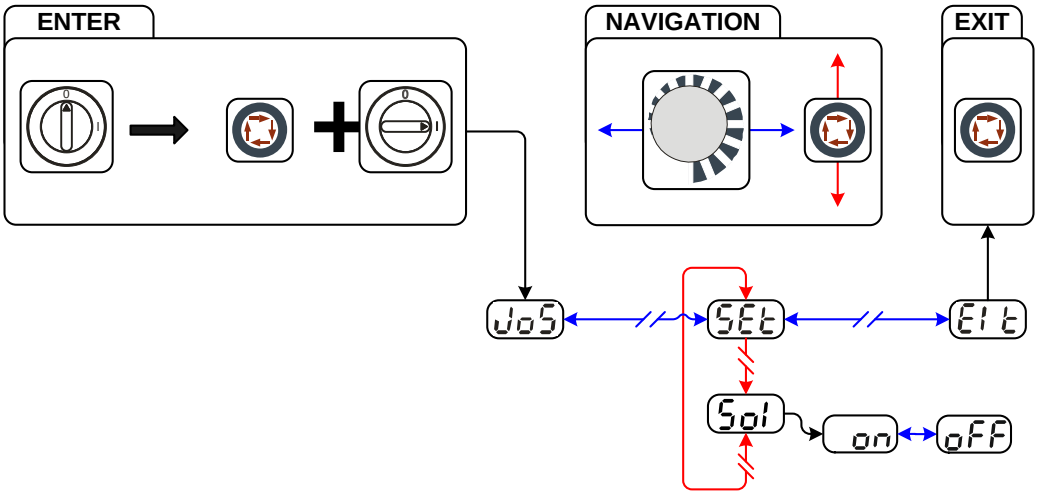

Figure 5-32

Display	Setting/selection
JoS	**Lock JOB menu** Protect welding parameters from unauthorised access.
SEt	**Settings** Settings for machine functions and parameter displays.
Sol	**TIG HF start (soft/hard) switching** • on = soft ignition (factory setting). • off = hard ignition.
EIt	**Exit the menu** Exit

5.12.8 Selecting the welding current polarity during the ignition phase

Selection of welding current polarity during ignition phase, until the arc stabilises. It always switches over to DC- polarity after a few milliseconds.

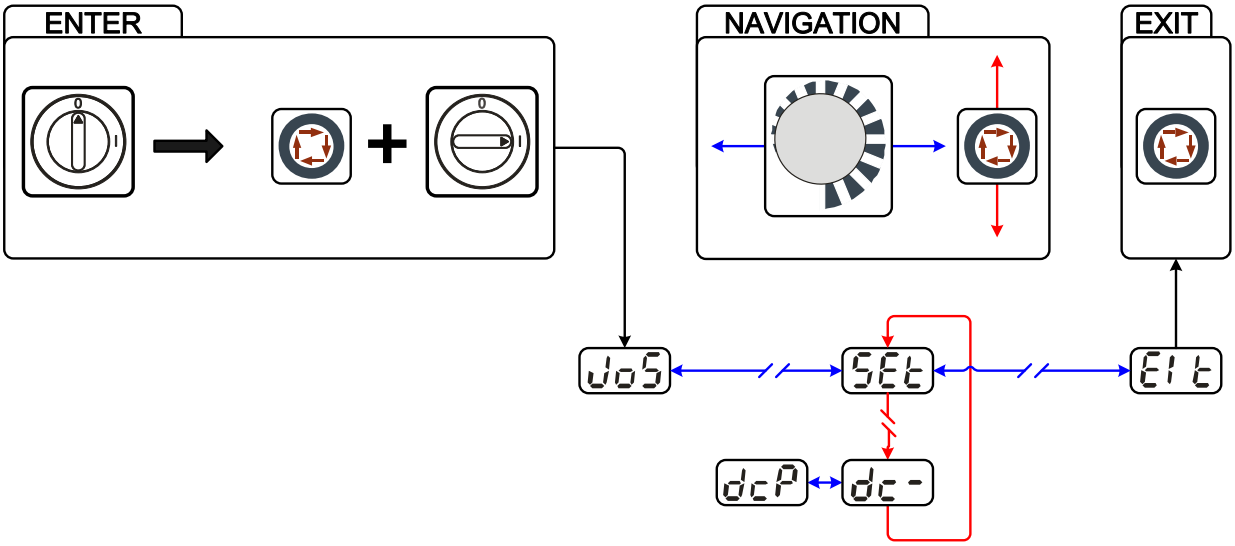

Figure 5-33

Display	Setting/selection
JoS	**Lock JOB menu** Protect welding parameters from unauthorised access.
SEt	**Settings** Settings for machine functions and parameter displays.
dc-	**Negative welding current polarity during the ignition phase**
dcP	**Positive welding current polarity during the ignition phase**
EIt	**Exit the menu** Exit

5.12.9 TIG antistick

The function prevents uncontrolled re-ignition following the sticking of the tungsten electrode in the weld pool by switching off the welding current. In addition, wear at the tungsten electrode is reduced.

The function takes effect in the main current phase of the latched operating mode- See 5.8.9.2 Latched mode chapter.

The 3rd and 4th cycle are omitted and the welder starts the new process with the 1st cycle. The user can switch the function on or off (see the procedure below).

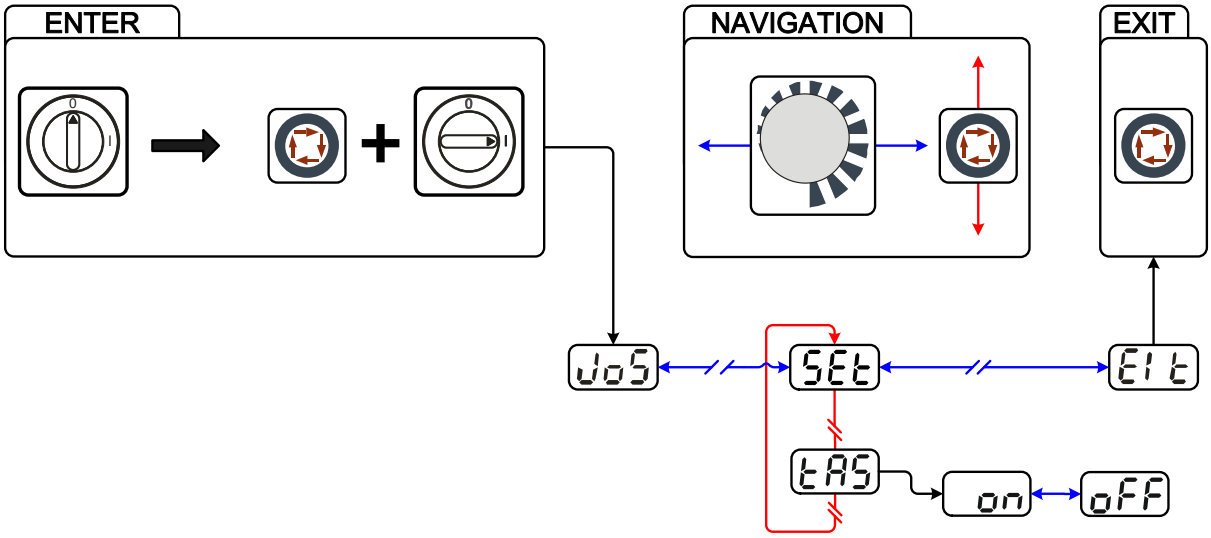

Figure 5-34

Display	Setting/selection
JoS	**Lock JOB menu** Protect welding parameters from unauthorised access.
SEt	**Settings** Settings for machine functions and parameter displays.
tAS	**TIG antistick** • on = function active (factory setting). • off = function inactive.
EIt	**Exit the menu** Exit

5.12.10 spotarc / Spotmatic configuration

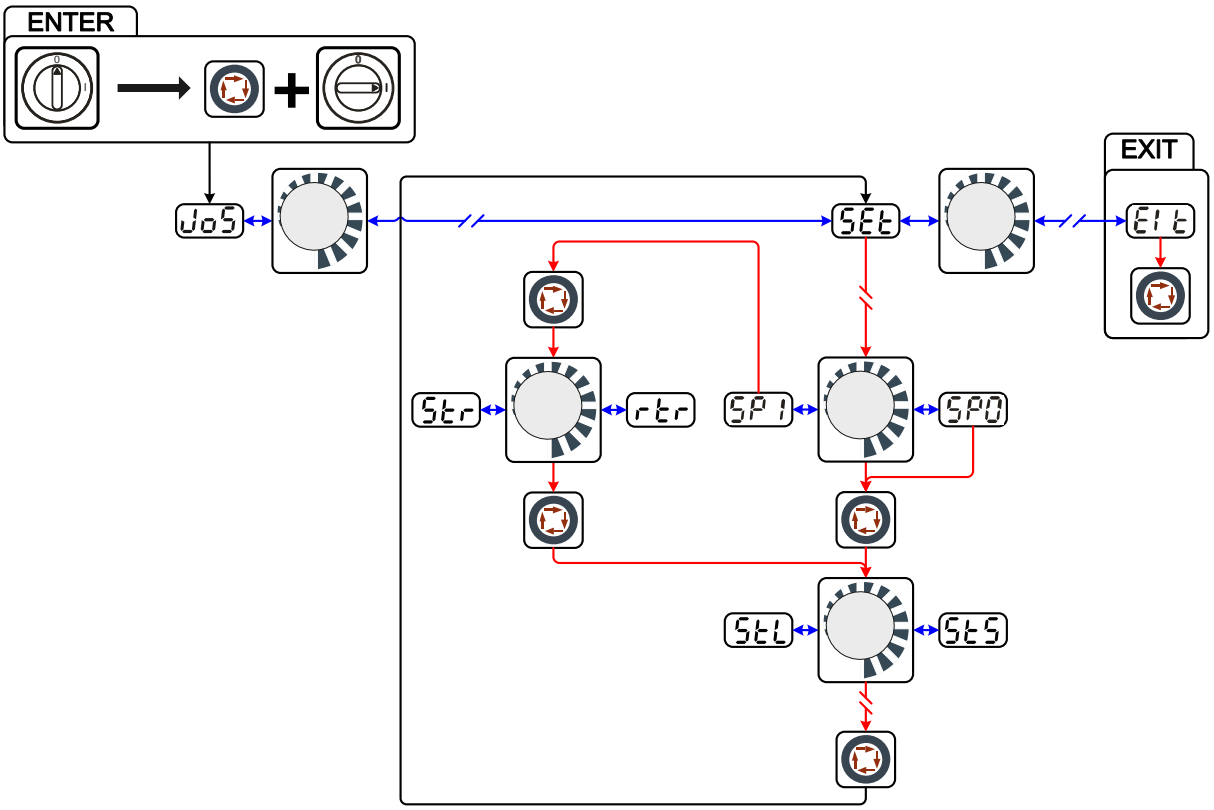

Figure 5-35

Display	Setting/selection
JoS	**Lock JOB menu** Protect welding parameters from unauthorised access.
SEt	**Settings** Settings for machine functions and parameter displays.
SP0	**Spotmatic** Function switched off
SP1	**Spotmatic** Function switched on
StS	**Setting spot time** • on = Short spot time (5 ms - 999 ms, 1 ms- steps) • off = long spot time (0,01 s - 20,0 s, 10 ms- steps)
StL	**Long spot time** Setting 0.01 s to 20.0 s (increments of 10 ms)
Str	**Separate process activation** The welding process has to be reactivated for every arc ignition by pressing the torch trigger.
rtr	**Permanent process activation** The welding process is activated by pressing the torch trigger once. The following arc ignitions are initiated by shortly touching the tungsten electrode against the workpiece.
Elt	**Exit the menu** Exit

5.12.11 Choosing the alternating current waveform

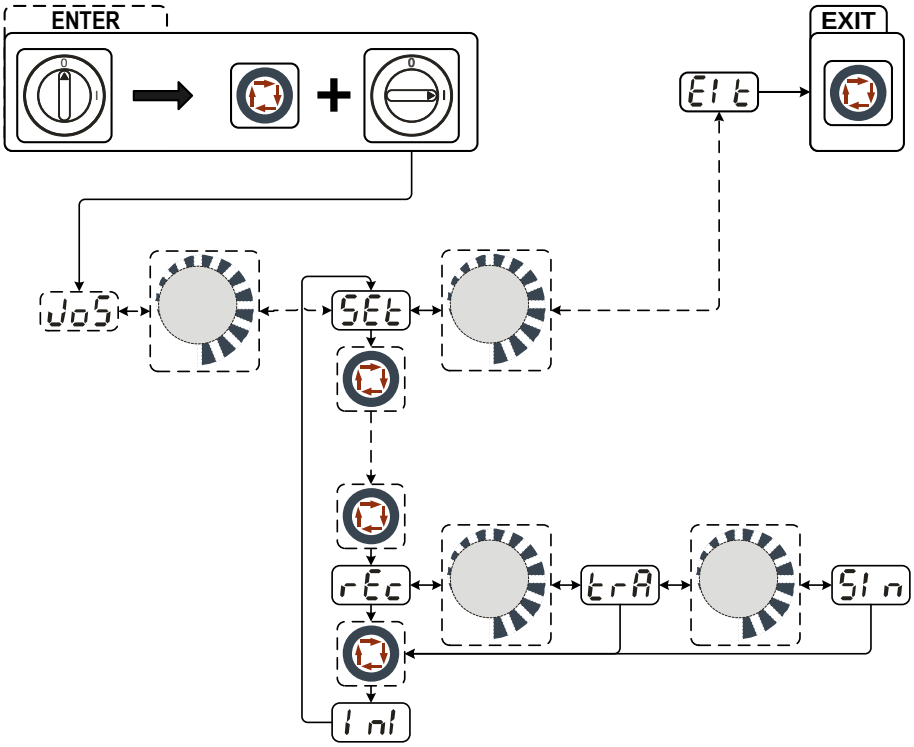

Figure 5-36

Display	Setting/selection
JoS	**Lock JOB menu** Protect welding parameters from unauthorised access.
SEt	**Settings** Settings for machine functions and parameter displays.
rEc	**Alternating current welding with rectangular current waveform** Maximum power loading and safe welding
trA	**Alternating current welding with trapezoidal current waveform** An all-rounder, suitable for most applications
Sln	**Alternating current welding with sinusoidal current waveform** Low noise level
Ini	**Initialising** Machine adopts previously selected settings
Elt	**Exit the menu** Exit

6 Maintenance, care and disposal

DANGER

Do not carry out any unauthorised repairs or modifications!
To avoid injury and equipment damage, the unit must only be repaired or modified by specialist, skilled persons!
The warranty becomes null and void in the event of unauthorised interference.

- Appoint only skilled persons for repair work (trained service personnel)!

Risk of injury from electric shock!
Cleaning machines that are not disconnected from the mains can lead to serious injuries!

- Disconnect the machine completely from the mains.
- Remove the mains plug!
- Wait for 4 minutes until the capacitors have discharged!

Repair and maintenance work may only be performed by qualified authorised personnel; otherwise the right to claim under warranty is void. In all service matters, always consult the dealer who supplied the machine. Return deliveries of defective equipment subject to warranty may only be made through your dealer. When replacing parts, use only original spare parts. When ordering spare parts, please quote the machine type, serial number and item number of the machine, as well as the type designation and item number of the spare part.

6.1 General

When used in the specified environmental conditions and under normal operating conditions, this machine is largely maintenance-free and requires a minimum of care.

There are some points, which should be observed, to guarantee fault-free operation of your welding machine. Among these are regular cleaning and checking as described below, depending on the pollution level of the environment and the length of time the unit is in use.

6.2 Maintenance work, intervals

6.2.1 Daily maintenance tasks

6.2.1.1 Visual inspection

- Mains supply lead and its strain relief
- Gas tubes and their switching equipment (solenoid valve)
- Other, general condition

6.2.1.2 Functional test

- Welding current cables (check that they are fitted correctly and secured)
- Gas cylinder securing elements
- Operating, message, safety and adjustment devices (Functional test)

6.2.2 Monthly maintenance tasks

6.2.2.1 Visual inspection

- Casing damage (front, rear and side walls)
- Transport elements (strap, lifting lugs, handle)

6.2.2.2 Functional test

- Selector switches, command devices, emergency stop devices, voltage reducing devices, message and control lamps

6.2.3 Annual test (inspection and testing during operation)

☞ ***The welding machine may only be tested by competent, capable personsl. A capable person is one who, because of his training, knowledge and experience, is able to recognise the dangers that can occur while testing welding power sources as well as possible subsequent damage and who is able to implement the required safety procedures.***

☞ ***For more information refer to the "Warranty registration" brochure supplied and our information regarding warranty, maintenance and testing at www.ewm-group.com!***

A periodic test according to IEC 60974-4 "Periodic inspection and test" has to be carried out. In addition to the regulations on testing given here, the relevant local laws and regulations must also be observed.

6.3 Disposing of equipment

☞ ***Proper disposal!***
The machine contains valuable raw materials, which should be recycled, and electronic components, which must be disposed of.

- ***Do not dispose of in household waste!***
- ***Observe the local regulations regarding disposal!***

6.3.1 Manufacturer's declaration to the end user

- According to European provisions (guideline 2002/96/EG of the European Parliament and the Council of January, 27th 2003), used electric and electronic equipment may no longer be placed in unsorted municipal waste. It must be collected separately. The symbol depicting a waste container on wheels indicates that the equipment must be collected separately.
  This machine is to be placed for disposal or recycling in the waste separation systems provided for this purpose.
- According to German law (law governing the distribution, taking back and environmentally correct disposal of electric and electronic equipment (ElektroG) from 16.03.2005), used machines are to be placed in a collection system separate from unsorted municipal waste. The public waste management utilities (communities) have created collection points at which used equipment from private households can be disposed of free of charge.
- Information about giving back used equipment or about collections can be obtained from the respective municipal administration office.
- EWM participates in an approved waste disposal and recycling system and is registered in the Used Electrical Equipment Register (EAR) under number WEEE DE 57686922.
- In addition to this, returns are also possible throughout Europe via EWM sales partners.

6.4 Meeting the requirements of RoHS

We, EWM AG Mündersbach, hereby confirm that all products supplied by us which are affected by the RoHS Directive, meet the requirements of the RoHS (Directive 2011/65/EU).

7 Rectifying faults

All products are subject to rigorous production checks and final checks. If, despite this, something fails to work at any time, please check the product using the following flowchart. If none of the fault rectification procedures described leads to the correct functioning of the product, please inform your authorised dealer.

7.1 Checklist for rectifying faults

☞ ***The correct machine equipment for the material and process gas in use is a fundamental requirement for perfect operation!***

Legend	Symbol	Description
	⸙	Fault/Cause
	🛠	Remedy

Functional errors

- ⸙ Insufficient coolant flow
  - 🛠 Check coolant level and refill if necessary
  - 🛠 Eliminate kinks in conduit system (hose packages)
  - 🛠 Reset automatic cutout of the coolant pump by activating
- ⸙ Air in the coolant circuit
  - 🛠 Vent coolant circuit - See 7.5 Vent coolant circuit chapter
- ⸙ Machine control without displaying the signal lights after switching on
  - 🛠 Phase failure > check mains connection (fuses)
- ⸙ No welding performance
  - 🛠 Phase failure > check mains connection (fuses)
- ⸙ Connection problems
  - 🛠 Make control lead connections and check that they are fitted correctly.

Welding torch overheated

- ⸙ Loose welding current connections
  - 🛠 Tighten power connections on the torch and/or on the workpiece
  - 🛠 Tighten contact tip correctly
- ⸙ Overload
  - 🛠 Check and correct welding current setting
  - 🛠 Use a more powerful welding torch

No arc ignition

- Incorrect ignition type setting.
  - Set ignition type changeover switch to the HF ignition setting.

Bad arc ignition

- Material inclusions in the tungsten electrode due to contact with filler material or workpiece
  - Regrind or replace the tungsten electrode
- Bad current transfer on ignition
  - Check the setting on the "Tungsten electrode diameter/Ignition optimisation" rotary dial and increase if necessary (higher ignition energy).

Unstable arc

- Material inclusions in the tungsten electrode due to contact with filler material or workpiece
  - Regrind or replace the tungsten electrode
- Incompatible parameter settings
  - Check settings and correct if necessary

Pore formation

- Inadequate or missing gas shielding
  - Check shielding gas setting and replace shielding gas cylinder if necessary
  - Shield welding site with protective screens (draughts affect the welding result)
  - Use gas lens for aluminium applications and high-alloy steels
- Unsuitable or worn welding torch equipment
  - Check size of gas nozzle and replace if necessary
- Condensation (hydrogen) in the gas tube
  - Purge hose package with gas or replace

7.2 Machine faults (error messages)

☞ ***A welding machine error is indicated by the collective fault signal lamp (A1) lighting up and an error code (see table) being displayed in the machine control display. In the event of a machine error, the power unit shuts down.***

☞ ***The display of possible error numbers depends on the machine version (interfaces/functions).***

- Document machine errors and inform service staff as necessary.

Error message	Possible cause	Remedy
E1	Water fault Only occurs if a water cooling unit is connected.	Ensure that sufficient water pressure can be built up. (e.g. top up water)
E2	Temperature error	Allow machine to cool down.
E3	Electronics error	Switch machine off and on again. If the fault persists, inform the service department.
E4	see "E3"	see "E3"
E5	see "E3"	see "E3"
E6	Balancing error in voltage recording.	Switch machine off, place the torch on an insulated surface and switch on again. If the fault persists, inform the service department.
E7	Balancing error in current recording.	Switch machine off, place the torch on an insulated surface and switch on again. If the fault persists, inform the service department.
E8	Error in one of the electronics supply voltages or excess temperature of the welding transformer.	Allow machine to cool down. If the error message persists, switch the machine off and back on again. If the fault persists, inform the service department.
E9	Low voltage	Switch off the machine and check the mains voltage.
E10	Secondary overvoltage	Switch machine off and on again. If the fault persists, inform the service department.
E11	Overvoltage	Switch off the machine and check the mains voltage.
E12	VRD (open circuit voltage reduction error)	Inform Service

7.3 Resetting welding parameters to the factory settings

☞ ***All customised welding parameters that are stored will be replaced by the factory settings.***

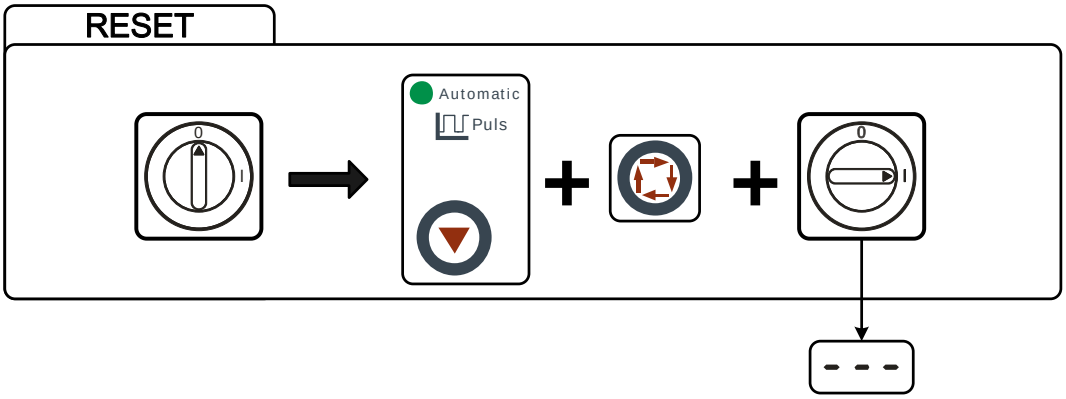

Figure 7-1

Display	Setting/selection
- - -	**Input confirmation** User entries are applied, release button(s).

7.4 Display machine control software version

☞ ***The query of the software versions only serves to inform the authorised service staff!***

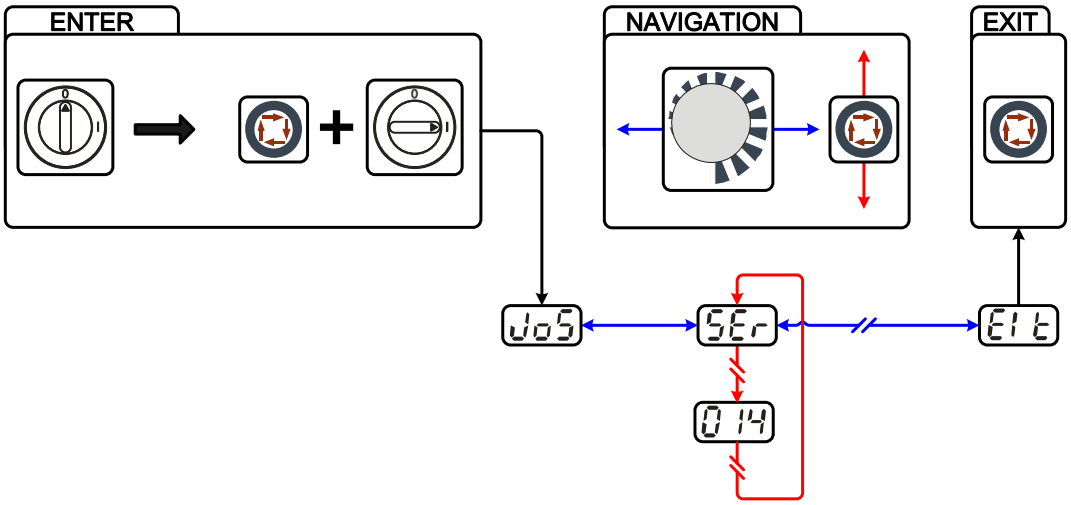

Figure 7-2

Display	Setting/selection
JoS	**Lock JOB menu** Protect welding parameters from unauthorised access.
SEr	**Service menu** Service settings
EIt	**Exit the menu** Exit
014	**Software version of the machine control** Version display (example 014 = version 14)

7.5 Vent coolant circuit

☞ ***To vent the cooling system always use the blue coolant connection, which is located as deep as possible inside the system (close to the coolant tank)!***

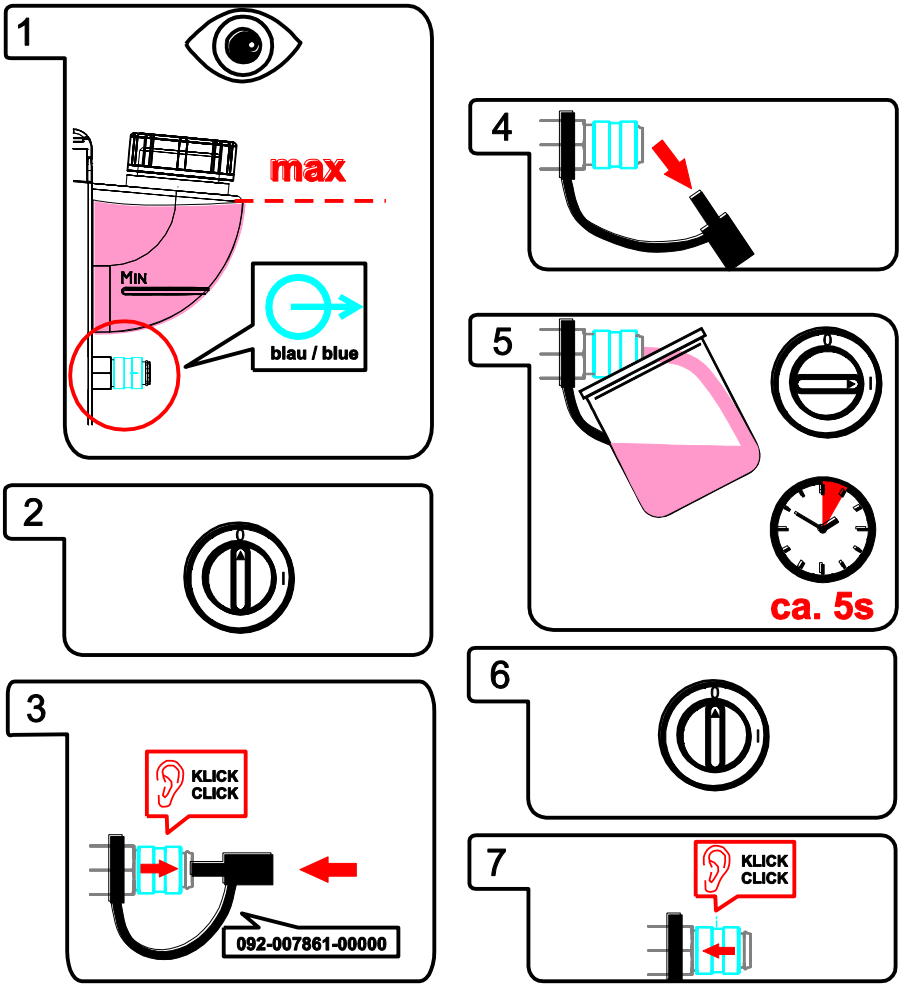

Figure 7-3

8 Technical data

☞ ***Performance specifications and guarantee only in connection with original spare and replacement parts!***

8.1 Tetrix 230 AC/DC

Setting range	TIG	MMA
Welding current **DC** **AC**	 3 A-230 A 5 A-230 A	 5 A-180 A -
Welding voltage	10.1 V-19.2 V	20.2 V-27.2 V
Duty cycle (DC) at 25 °C		
40% DC	230 A	-
45% DC	-	180 A
60% DC	210 A	160 A
100% DC	190 A	140 A
Duty cycle (DC) at 40 °C		
35% DC	230 A	180 A
60% DC	200 A	150 A
100% DC	170 A	120 A
Load alternation	10 min. (60% DC ≙ 6 min. welding, 4 min. pause)	
Open circuit voltage (DC)	45 V	
Mains voltage (tolerances)	1 x 230 V (-40% to +15%)	
Frequency	50/60Hz	
Mains fuse	1 x 20 A (safety fuse, slow-blow)	
Mains connection lead	H07RN-F3G2.5	
Max. connected load	5.2 kVA	5.8 kVA
Recommended generator rating	7.8 kVA	
cosφ / Efficiency	1.0 / 85 %	
Insulation class/protection classification	H/IP 23	
Ambient temperatures	-25 °C to +40 °C	
Machine cooling	Fan	
Torch cooling	Gas	
Workpiece lead	35 mm^2	
Dimensions L x W x H	600 x 205 x 415mm	
Weight	19,3 kg	
EMC class	A	
Constructed to standards	IEC 60974-1, -3, -10 S / CE	

9 Accessories

☞ ***Performance-dependent accessories like torches, workpiece leads, electrode holders or intermediate hose packages are available from your authorised dealer.***

9.1 Remote controls and accessories

Type	Designation	Item no.
RT1 19POL	Remote control current	090-008097-00000
RTG1 19POL	Remote control, current	090-008106-00000
RTP1 19POL	Remote control spot welding / pulses	090-008098-00000
RTP2 19POL	Remote control spot welding / pulses	090-008099-00000
RTP3 spotArc 19POL	spotArc remote control for spot welding / pulses	090-008211-00000
RTF1 19POL 5 M	Foot-operated remote control current with connection cable	094-006680-00000
RA5 19POL 5M	Remote control e.g. connection cable	092-001470-00005
RA10 19POL 10M	Remote control e.g. connection cable	092-001470-00010
RA20 19POL 20M	Remote control e.g. connection cable	092-001470-00020
RV5M19 19POLE 5M	Extension cable	092-000857-00000

9.2 Transport vehicle

Type	Designation	Item no.
Trolly 35.2-2	Transport vehicle	090-008296-00000
Trolly 38-2 E	Transport vehicle, long wheelbase	090-008270-00000

9.3 Options

Type	Designation	Item no.
ON Filter TIG 200/300-2	Retrofit option, dirt filter for air inlet	092-002551-00000

9.4 Welding torch cooling system

Type	Designation	Item no.
cool40 U31	Cooling module	090-008593-00502

9.5 General accessories

Type	Designation	Item no.
ADAP CEE16/SCHUKO	Earth contact coupling/CEE16A plug	092-000812-00000
DM AR D F1	Flowmeter pressure regulator	094-001980-00000
DMDIN TN 200B AR/MIX 35L	Manometer pressure regulator	094-000009-00000
GH 2X1/4" 2M	Gas hose	094-000010-00001
ADAP 8-5 POL	8 to 5-pole adapter	092-000940-00000

10 Appendix A

10.1 Overview of EWM branches

Headquarters

EWM AG
Dr. Günter-Henle-Straße 8
56271 Mündersbach · Germany
Tel: +49 2680 181-0 · Fax: -244
www.ewm-group.com · info@ewm-group.com

Technology centre

EWM AG
Forststraße 7-13
56271 Mündersbach · Germany
Tel: +49 2680 181-0 · Fax: -144
www.ewm-group.com · info@ewm-group.com

Production, Sales and Service

EWM AG
Dr. Günter-Henle-Straße 8
56271 Mündersbach · Germany
Tel: +49 2680 181-0 · Fax: -244
www.ewm-group.com · info@ewm-group.com

EWM HIGH TECHNOLOGY (Kunshan) Ltd.
10 Yuanshan Road, Kunshan · New & Hi-tech Industry Development Zone
Kunshan City · Jiangsu · Post code 215300 · People´s Republic of China
Tel: +86 512 57867-188 · Fax: -182
www.ewm.cn · info@ewm.cn · info@ewm-group.cn

EWM HIGHTEC WELDING s.r.o.
9. května 718 / 31
407 53 Jiříkov · Czech Republic
Tel.: +420 412 358-551 · Fax: -504
www.ewm-jirikov.cz · info@ewm-jirikov.cz

Sales and Service Germany

EWM AG
Sales and Technology Centre
Grünauer Fenn 4
14712 Rathenow · Tel: +49 3385 49402-0 · Fax: -20
www.ewm-rathenow.de · info@ewm-rathenow.de

EWM AG
Rudolf-Winkel-Straße 7-9
37079 Göttingen · Tel: +49 551-3070713-0 · Fax: -20
www.ewm-goettingen.de · info@ewm-goettingen.de

EWM AG
Sachsstraße 28
50259 Pulheim · Tel: +49 2234 697-047 · Fax: -048
www.ewm-pulheim.de · info@ewm-pulheim.de

EWM AG
August-Horch-Straße 13a
56070 Koblenz · Tel: +49 261 963754-0 · Fax: -10
www.ewm-koblenz.de · info@ewm-koblenz.de

EWM AG
Eiserfelder Straße 300
57080 Siegen · Tel: +49 271 3878103-0 · Fax: -9
www.ewm-siegen.de · info@ewm-siegen.de

EWM HIGHTEC WELDING GmbH
Sales and Technology Centre
Draisstraße 2a
69469 Weinheim · Tel: +49 6201 84557-0 · Fax: -20
www.ewm-weinheim.de · info@ewm-weinheim.de

EWM Schweißtechnik Handels GmbH
Karlsdorfer Straße 43
88069 Tettnang · Tel: +49 7542 97998-0 · Fax: -29
www.ewm-tettnang.de · info@ewm-tettnang.de

EWM Schweißtechnik Handels GmbH
Pfaffensteig 17
89143 Blaubeuren · Tel: +49 7344 9191-75 · Fax: -77
www.ewm-blaubeuren.de · info@ewm-blaubeuren.de

EWM Schweißtechnik Handels GmbH
Heinkelstraße 8
89231 Neu-Ulm · Tel: +49 731 7047939-0 · Fax: -15
www.ewm-neu-ulm.de · info@ewm-neu-ulm.de

Sales and Service International

EWM HIGHTEC WELDING GmbH
Wiesenstraße 27b
4812 Pinsdorf · Austria · Tel: +43 7612 778 02-0 · Fax: -20
www.ewm-austria.at · info@ewm-austria.at

EWM HIGH TECHNOLOGY (Kunshan) Ltd.
10 Yuanshan Road, Kunshan · New & Hi-tech Industry Development Zone
Kunshan City · Jiangsu · Post code 215300 · People´s Republic of China
Tel: +86 512 57867-188 · Fax: -182
www.ewm.cn · info@ewm.cn · info@ewm-group.cn

EWM HIGHTEC WELDING UK Ltd.
Unit 2B Coopies Way · Coopies Lane Industrial Estate
Morpeth · Northumberland · NE61 6JN · Great Britain
Tel: +44 1670 505875 · Fax: -514305
www.ewm-morpeth.co.uk · info@ewm-morpeth.co.uk

EWM HIGHTEC WELDING Sales s.r.o. / Prodejní a poradenské centrum
Tyršova 2106
256 01 Benešov u Prahy · Czech Republic
Tel: +420 317 729-517 · Fax: -712
www.ewm-benesov.cz · info@ewm-benesov.cz

Plants Branches More than 400 EWM sales partners worldwide